FZ-*i*WP Series
FX-*i*WP Series

Dust and Waterproof Precision Balance

INSTRUCTION MANUAL

FZ-120*i*WP / FZ-200*i*WP / FZ-300*i*WP
FZ-1200*i*WP / FZ-2000*i*WP / FZ-3000*i*WP

FX-120*i*WP / FX-200*i*WP / FX-300*i*WP
FX-1200*i*WP / FX-2000*i*WP / FX-3000*i*WP

1WMPD4001591B

A&D Company, Limited

⚠ This is a caution mark.

The contents of this manual and the specifications of the instrument covered by this manual are subject to change for improvement without notice.

CONTENTS

Basic Operation

1. INTRODUCTION 3
1-1 About This Manual 3
1-2 Features 3
1-3 Compliance 4

2. UNPACKING THE BALANCE 7
2-1 Unpacking 7
2-2 Installing the Balance 8

3. PRECAUTIONS 9
3-1 Before Use 9
3-2 During Use 10
3-3 After Use 11
3-4 Power Supply 11
3-5 Display Symbols and Key Operation 12

4. WEIGHING UNITS 13
4-1 Units 13
4-2 Storing Units 15

5. WEIGHING 16
5-1 Basic Operation (Gram Mode) 16
5-2 Counting Mode (PCS) 17
5-3 Percent Mode (%) 19
5-4 Statistical Calculation Mode 20
5-5 Statistical Calculation Mode (Example of Use) 25

Adapting to the Environment

6. RESPONSE ADJUSTMENT 27

7. CALIBRATION 28
7-1 Calibration Mode 28
7-2 Calibration Using the Internal mass (One-Touch Calibration, only for FZ-*i*WP series) 29
7-3 Correcting the Internal Mass Value: 1 (Only for FZ-*i* WP series) 30
7-4 Correcting the Internal Mass Value: 2 (Only for FZ-*i* WP series) 31
7-5 Calibration Using an External Weight 32
7-6 Calibration Test Using an External Weight 34

Functions

8. FUNCTION SWITCH AND INITIALIZATION 36
8-1 Permit or Inhibit 36
8-2 Initializing the Balance 37

9. FUNCTION TABLE **38**
9-1 Structure and Sequence of the Function Table 38
9-2 Display and Keys 38
9-3 Details of the Function Table 39
9-4 Description of the Class “Environment, Display” 42
9-5 Description of the Item “Data Output Mode” 44
9-6 Description of the Item “Data Format” 45
9-7 Data Format Examples 47
9-8 Description of the Item “Application Function” 48
9-9 Comparator Function 49
9-10 Clock and Calendar Function (Only for the FZ-*i* WP series) 50

10. ID NUMBER AND GLP REPORT **52**
10-1 Setting the ID Number 52
10-2 GLP Report 52

11. UNDERHOOK **56**

12. PROGRAMMABLE-UNIT **57**

RS-232C Serial Interface

13. RS-232C SERIAL INTERFACE **58**

14. CONNECTION TO PERIPHERAL EQUIPMENT **59**
14-1 Connection to the AD-8121B Printer 59
14-2 Connection to a Computer 60
14-3 Using Windows Communication Tools (WinCT) 61

15. COMMANDS **62**
15-1 Command List 62
15-2 Acknowledge Code and Error Codes 63
15-3 Settings Related to the RS-232C 64

Maintenance

16. MAINTENANCE **65**

17. TROUBLESHOOTING **66**
17-1 Checking the Balance Performance and Environment 66
17-2 Error Codes 67
17-3 Asking For Repair 68

18. OPTIONS **69**

19. SPECIFICATIONS **73**

20. EXTERNAL DIMENSIONS **75**

21. TERMS / INDEX **77**

1. INTRODUCTION

This manual describes how the FZ-*i* WP series and the FX-*i* WP series balance works and how to get the most out of it in terms of performance.
Read this manual thoroughly before using the balance and keep it at hand for future reference.

1-1 About This Manual

This manual consists of the following five parts:

Basic operation ..... Describes precautions on handling the balance, balance construction and basic balance operation.

Adapting to the environment .. Describes response adjustment and calibration.

Functions..... Describes various functions of the balance.

RS-232C serial interface ..... Describes the interface which transmits data and controls the balance.

Maintenance..... Describes maintenance, error codes, troubleshooting, specifications and options.

1-2 Features

- Dust-tight and protected against water jets (complying with IP65), suitable to weigh powdery or liquid material. A waterproof RS-232C cable (AX-KO2737-500) is available as an option.
- Compact general-purpose balance, can be installed almost anywhere.
- Casing construction, strong protection against dust and water.
- Stabilization time of one second. When FAST is selected for the response rate, a stabilization time of one second, to read a displayed value after a sample is placed on the pan, has been achieved.
- Multiple weighing units with most of the common units used around the world.
- Standard RS-232C serial interface to communicate with a computer and to output the Good Laboratory Practice (GLP) / Good Manufacturing Practice (GMP) compliant report.
- Statistical calculation mode to statistically calculate the weight data, and display or output the sum, maximum, minimum, range (maximum-minimum), average, standard deviation and coefficient of variation.
- Comparator Indicators, displaying the comparison results.
- Hold Function, provided for weighing a moving object such as an animal.
- Breeze break, provided for the FZ-*i* WP series and the FX-120*i* WP / FX-200*i* WP / FX-300*i* WP, for more accurate weighing.
- Underhook, provided for suspended weighing.
- As options, the USB interface (FX*i*-02), the Ethernet interface (FX*i*-08) and the built-in battery unit (FX*i*-09) are available. When any one of these is used, the balance does not comply with IP65.

1-3 Compliance

Compliance with FCC Rules

Please note that this device generates, uses and can radiate radio frequency energy. This device has been tested and has been found to comply with the limits of a Class A computing device pursuant to Subpart J of Part 15 of FCC rules. These rules are designed to provide reasonable protection against interference when this device is operated in a commercial environment. If this unit is operated in a residential area, it may cause some interference and under these circumstances the user would be required to take, at his own expense, whatever measures are necessary to eliminate the interference.
(FCC = Federal Communications Commission in the U.S.A.)

Compliance with EMC Directives

CE This device features radio interference suppression and safety regulation in compliance with the following Council Directives

Council directive 2004/108/EEC	EN61326	EMC directive
Council directive 2006/95/EC	EN60950	Safety of Information Technology Equipment

- The CE mark is an official mandatory European marking.
  Please note that any electronic product must comply with local laws and regulations when sold or used anywhere outside Europe.

A&D INSTRUMENTS

A&D Instruments Ltd
24 Blacklands Way
Abingdon Business Park
Abingdon, Oxfordshire
OX14 1DY United Kingdom
Tel: +44(0)1235 550420
Fax: +44 (0)1235 550485
Email: info@aandd-eu.net
Internet: http://www.aandd-eu.net
Vat No: GB 596 1273 15

CE

A & D Instruments Ltd. hereby declare that the **FZ-i series** conforms to the requirements of the council directives on …

Electromagnetic Compatibility (EMC) 2004/108/EEC and **Low Voltage (LVD) 2006/95/EC**

provided that they bear the CE mark of conformity.

Standards applicable :

EN 61326:2006 Electrical equipment for measurement, control and laboratory use - EMC requirements. Minimum immunity test requirements

For the AC Adapter Models: TB-238E, TB-238U, TB-219(EPA-121DA-15), TB-124E and TB-124U:

Standards applicable : EN 60950-1, EN61204-3, EN 55022, EN55024, EN 61000-3-2, EN61000-3-3

CE Mark first applied March 2009

Signed for A&D Instruments in Oxford England May 2009

Takeo Goto
Managing Director

... Clearly a Better Value

A&D INSTRUMENTS

A&D Instruments Ltd
24 Blacklands Way
Abingdon Business Park
Abingdon, Oxfordshire
OX14 1DY United Kingdom
Tel: +44(0)1235 550420
Fax: +44 (0)1235 550485
Email: info@aandd-eu.net
Internet: http://www.aandd-eu.net
Vat No: GB 596 1273 15

CE

A & D Instruments Ltd. hereby declare that the following balance series conforms to the requirements of the council directives on …

Electromagnetic Compatibility (EMC) 89/336/EEC

and

Low Voltage Equipment (LVD) 73/23/EEC amended by 93/68/EEC

FX-i Series

Standards applicable :

BS EN 61326	Electrical Equipment for Measurement, Control and Laboratory use - EMC Requirements - Class B
BS EN 60950	Safety of Information Technology Equipment.

CE Mark first applied March 2006

Signed for A&D Instruments in Oxford England March 2006

Takeo Goto
Managing Director

… Clearly a Better Value

2. UNPACKING THE BALANCE

2-1 Unpacking

- The balance is a precision instrument. Unpack the balance carefully. Keep the packing material to be used for transporting the balance in the future.
- The packing contents depend on the balance model. See the illustrations to confirm that everything is contained.

The breeze break

Assemble the breeze break as shown below.
Follow the numbered sequence.

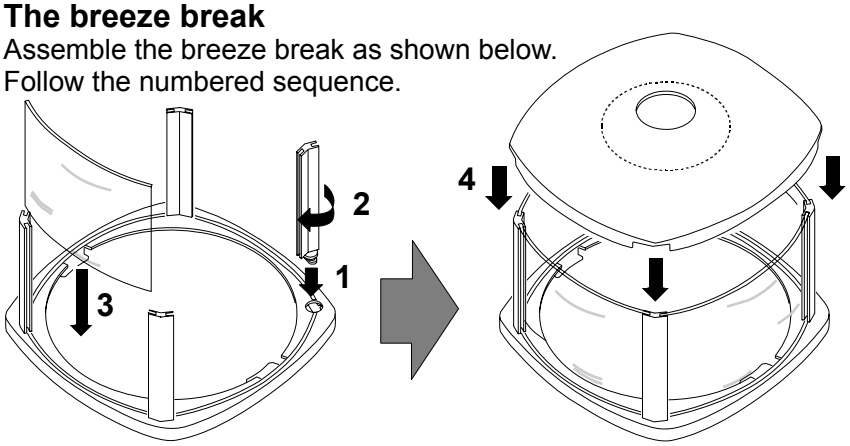

The breeze break is an accessory for FZ-*i* WP series, FX-120*i* WP, FX-200*i* WP, FX-300*i* WP .

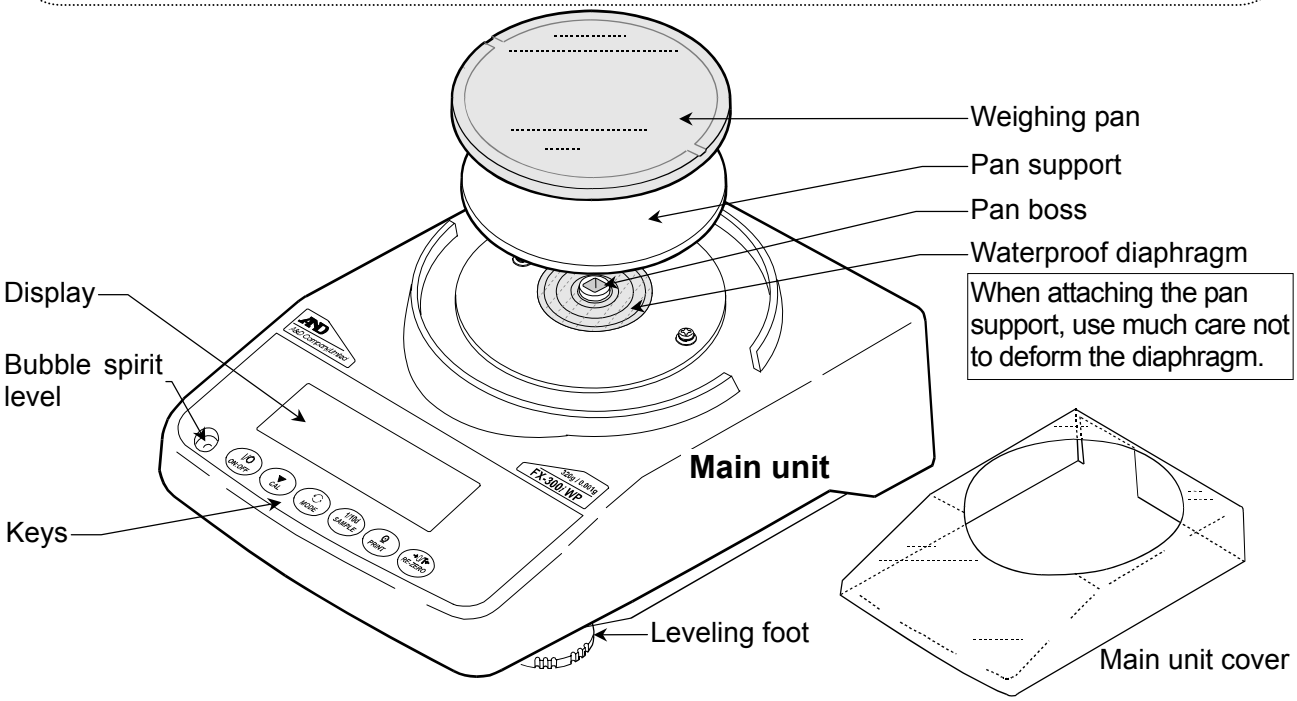

When attaching the pan support, use much care not to deform the diaphragm.

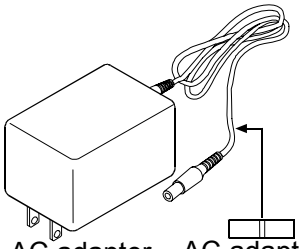

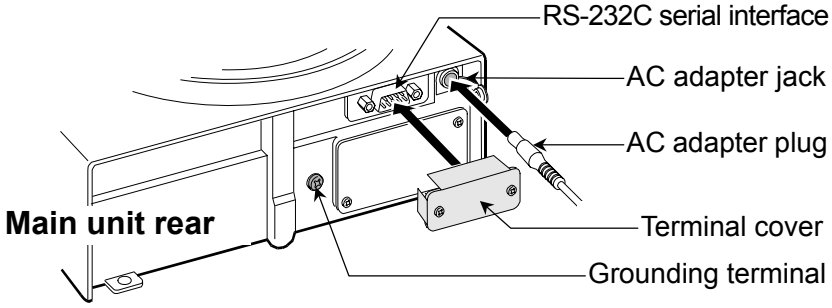

Note
Please confirm that the AC adapter type is correct for your local voltage and receptacle type.

The AC adapter plug is protected against dust and may be difficult to insert. When inserting the plug, turn the plug while pushing on it.

To use as a dust and waterproof balance, cover the RS-232C interface connector, or connect the waterproof RS-232C cable

2-2 Installing the Balance

Install the balance as follows:

1. Place the balance on a solid weighing table. Refer to “3. PRECAUTIONS” for installing the balance.
2. ▪ In case of FZ-*i* WP series and FX-120*i* WP / FX-200*i* WP / FX-300*i* WP
   Assemble the pan support, weighing pan and breeze break, on the balance as shown in the illustration on page 7.

   ▪ In case of FX-1200*i* WP / FX-2000*i* WP / FX-3000*i* WP
   Assemble the pan support and weighing pan on the balance as shown in the illustration on page 7.
3. Adjust the leveling feet to level the balance. Confirm it using the bubble spirit level.
4. Confirm that the AC adapter type is correct for the local voltage and power receptacle type.
5. Connect the AC adapter to the balance. Warm up the balance for at least 30 minutes with nothing on the weighing pan.

Note
The AC adapter plug is protected against dust and may be difficult to insert. When inserting the plug, turn the plug while pushing on it.

3. PRECAUTIONS

To get the optimum performance from the balance and acquire accurate weight data, note the following:

3-1 Before Use

- The meaning of IP65 is "No ingress of dust. Projected against water jets".
  If a powerful water jet is used or the balance is immersed in water, the ingress of water may cause damage to the balance.
- Confirm that "the plug is inserted firmly into the AC adapter jack" and "the RS-232C interface connector is covered using the terminal cover or the waterproof RS-232C cable (AX-KO2737-500) is connected", when using as a dust and waterproof balance.
- When the balance is used without the terminal cover on the RS-232C interface connector or a standard RS-232C cable is used, the balance does not comply with IP65.
- Install the balance in an environment where the temperature and humidity are not excessive. The best operating temperature is about 20°C / 68°F at about 50% relative humidity.
- Install the balance where it is not exposed to direct sunlight and it is not affected by heaters or air conditioners.
- Install the balance where it is free of dust.
- Install the balance away from equipment which produces magnetic fields.
- Install the balance in a stable place avoiding vibration and shock. Corners of rooms on the first floor are best, as they are less prone to vibration.
- The weighing table should be solid and free from vibration, drafts and as level as possible.
- Level the balance by adjusting the leveling feet and confirm it using the bubble spirit level.

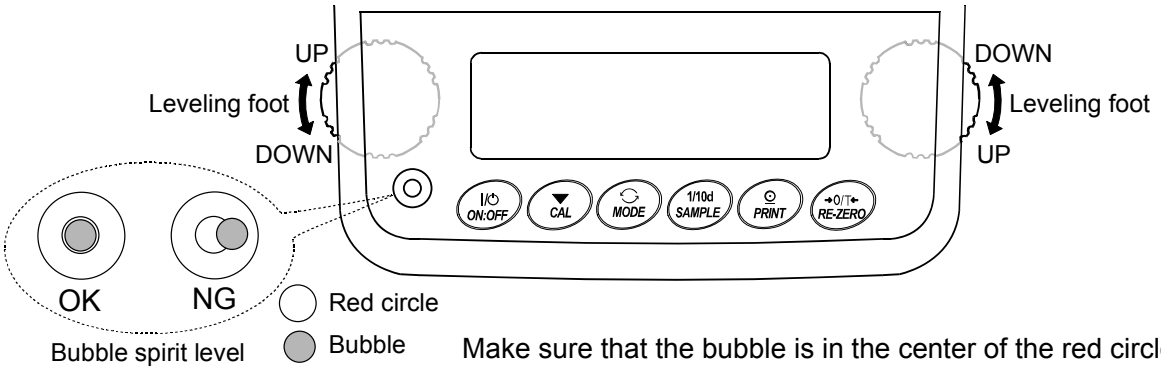

Make sure that the bubble is in the center of the red circle.

When the bubble is off to the left:
Turn the leveling foot on the front right in the clockwise direction.

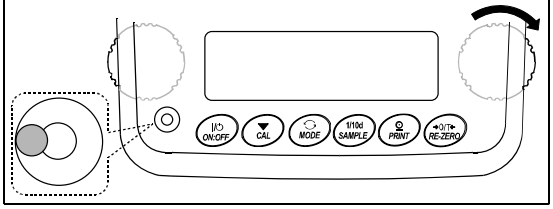

When the bubble is off to the right:
Turn the leveling foot on the front left in the clockwise direction

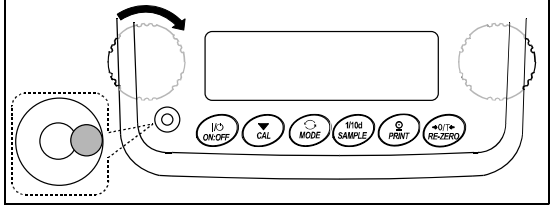

When the bubble is off to the backward position:
Turn both leveling feet on the front
in the clockwise direction at the same time.

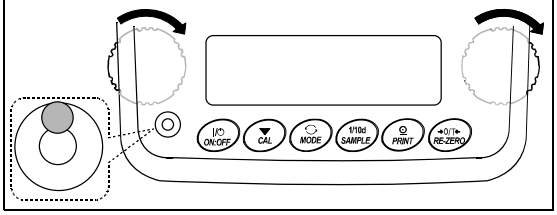

When the bubble is off to the forward position:
Turn both leveling feet on the front
in the counterclockwise direction at the same time.

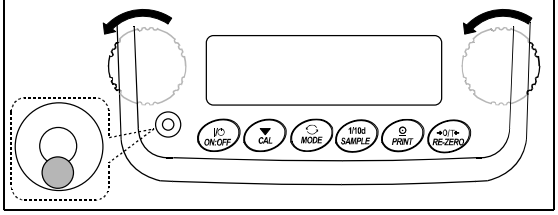

- Ensure a stable power source when using the AC adapter.
- Plug in the AC adapter and warm up the balance for at least one hour.
- Calibrate the balance before use or after having moved it to another location.

Caution: Do not install the balance where flammable or corrosive gas is present.

3-2 During Use

- The FZ-*i* WP series and the FX-*i* WP series balance has a casing with high sealing performance due to its dust-tight and waterproof design. Therefore, a very subtle change in the atmospheric pressure in the installation site, for example, generated by opening or closing the door, affects the weighing and may yield an unstable weight value. Wait for the atmospheric pressure to stabilize before weighing.
- If the residue of a powdery or liquid material is left on the waterproof diaphragm or the pan boss, it may cause weighing errors. Clean them before weighing.
- If the waterproof diaphragm is deformed due to overloading, it may cause weighing errors. Remove the load and wait for the waterproof diaphragm to restore to the original shape before continuing with weighing.
- Discharge static electricity from the material to be weighed (hereinafter referred to as the sample). When a sample could have a static charge, the weight data is influenced. Ground the balance and try the following:
  - Eliminate static electricity using the optional AD-1683 DC static eliminator.
  - Try to keep the ambient humidity above 45%RH.
  - Use a metal shield case for a charged sample.
  - Wipe charged plastic samples with a moistened cloth.
- This balance uses a strong magnet as part of the balance assembly, so please use caution when weighing magnetic materials such as iron. If there is a problem, use the underhook on the bottom of the balance to suspend the material away from the influence of the magnet.
- Eliminate the temperature difference between a sample and the environment. When a sample is warmer (cooler) than the ambient temperature, the sample will be lighter (heavier) than the true weight. This error is due to a rising (falling) draft around the sample.
- Make each weighing gently and quickly to avoid errors caused by the

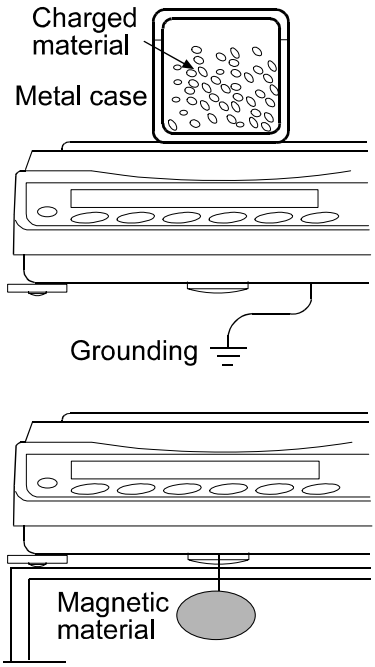

evaporation of moisture from the sample or the absorption of moisture by the sample.

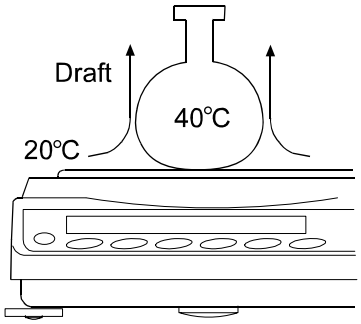

- Do not drop things upon the weighing pan, or place a sample on the pan that is beyond the balance weighing capacity. Place a sample in the center of the weighing pan.
- Do not use a sharp instrument such as a pencil to press the keys. Use your finger only.
- Press the RE-ZERO key before each weighing to eliminate possible errors.
- Calibrate the balance periodically so as to eliminate possible errors.
- Take into consideration the affect of air buoyancy on a sample when more accuracy is required.
- Prevent foreign materials, such as powder, liquid and metal, from invading the area around the weighing pan.
- The breeze break (FZ-*i* WP series and FX-120*i* WP / FX-200*i* WP / FX-300*i* WP) is provided as an accessory. An anti-static treatment has been applied to the breeze break components, but they may be charged with static electricity when they are unpacked or when the humidity is low. If the weight value is unstable even when there are no drafts or the balance has a problem with repeatability, remove the breeze break. Or wipe the clear plates with a moistened cloth, use the optional AD-1683 DC static eliminator or apply an anti-static spray.

3-3 After Use

- Do not allow the balance to be immersed in water. Even though the balance complies with IP code, the balance will not withstand being completely immersed in water.
- Avoid mechanical shock to the balance.
- Do not disassemble the balance. Contact the local A&D dealer if the balance needs service or repair.
- Do not use organic solvents to clean the balance. Clean the balance with a lint free cloth that is moistened with warm water and a mild detergent.
- The edge of the weighing pan is sharp. Use much care when cleaning the pan.

3-4 Power Supply

- When the AC adapter is connected, the balance is in the standby mode if the standby indicator is on (refer to “3-5 Display Symbols and Key Operation”). This is a normal state and does not harm the balance. For accurate weighing, warm up the balance for at least 30 minutes before use.

3-5 Display Symbols and Key Operation

Key operation

Key operation affects how the balance functions. The basic key operations are:

"Press and release the key immediately" or "Press the key"
= normal key operation during measurement.

"Press and hold the key".

Display symbols

- Number of statistical data (Statistical calculation mode)
- Displays the weight data relative to the weighing capacity, in percentage, in the weighing mode **(Capacity indicator)**

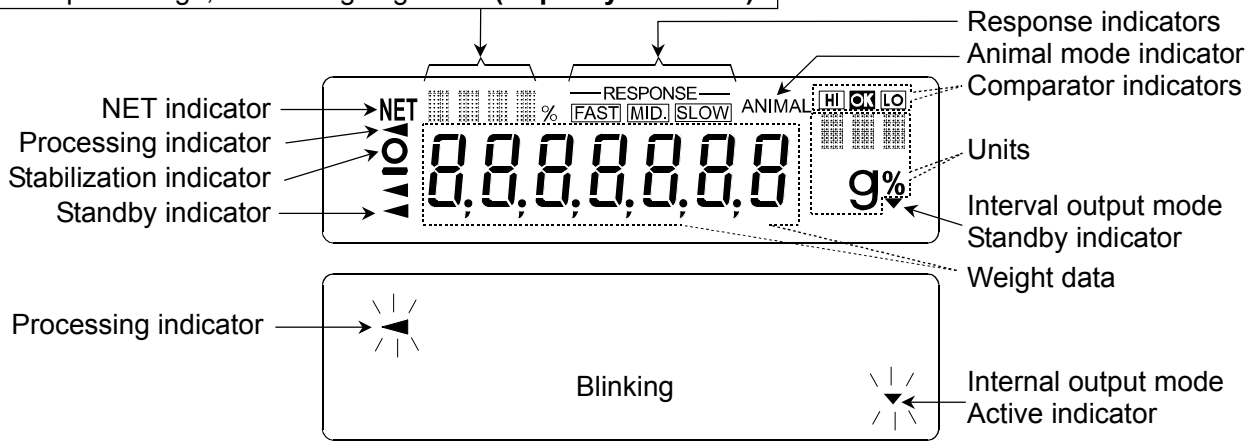

Each key, when pressed or when pressed and held, functions as follows:

Key	When pressed	When pressed and held
I/⏻ ON:OFF	Turns the display on or off. The standby indicator is displayed when the display is turned off. The weighing mode is enabled when the display is turned on. This key is available anytime. Pressing the key during operation will interrupt the operation and turn the display off.	
1/10d SAMPLE	In the weighing mode, turns the minimum weighing value on or off. In the counting or percent mode, enters the sample storing mode.	Enters the function table mode. Refer to "9. FUNCTION TABLE".
MODE	Switches the weighing units stored in the function table. Refer to "4. WEIGHING UNITS".	Enters the response adjustment mode.
CAL	Cancels the operation when performing settings.	Enters the calibration mode.
PRINT	Outputs the weight data to a printer or personal computer using the RS-232C serial interface, depending on the function table settings. Confirms the operation when performing settings.	No function at the factory setting By changing the function table: Outputs "Title block" and "End block" for GLP /GMP compliant report. (Refer to "10-2 GLP report".)
→0/T← RE-ZERO	Sets the display to zero.	

4. WEIGHING UNITS

4-1 Units

With the FZ-*i* WP series and the FX-*i* WP series balance, the following weighing units and weighing modes are available:

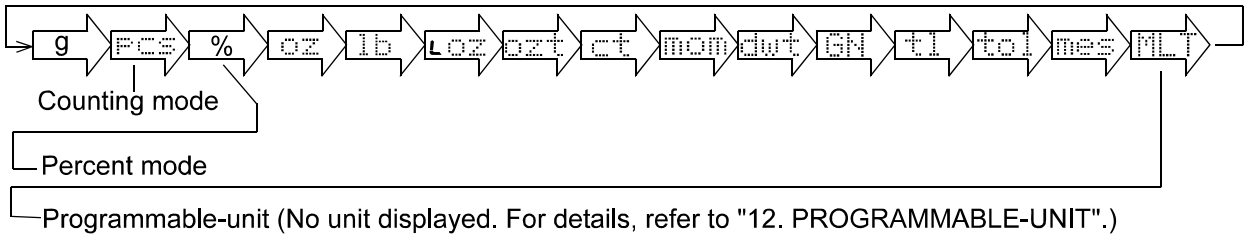

A unit or mode can be selected and stored in the function table as described on page 15.
If a weighing mode (or unit of weight) has been turned off, that mode or unit will be missing in the sequence. Tael has four varieties, one of which can be selected and installed at the factory.

To select a unit or mode for weighing, press the MODE key.For details about the units and modes, see the table below:

Name (unit, mode)	Display	Function table (Storing mode)	Conversion factor 1 g =
Gram	g	g	1 g
Counting mode	pcs	pcs	—
Percent mode	%	%	—
Ounce (Avoir)	oz	oz	28.349523125 g
Pound	lb	lb	453.59237 g
Pound/Ounce	Loz	LO	1 Lb = 16 oz, 1 oz = 28.349523125 g
Troy Ounce	ozt	ozt	31.1034768 g
Metric Carat	ct	ct	0.2 g
Momme	mom	mom	3.75 g
Pennyweight	dwt	dwt	1.55517384 g
Grain (UK)	GN	GN	0.06479891 g
Tael (HK general, Singapore)	tl	tl	37.7994 g
Tael (HK jewelry)			37.429 g
Tael (Taiwan)			37.5 g
Tael (China)			31.25 g
Tola (India)	tol	tol	11.6638038 g
Messghal	mes	mes	4.6875 g
Programmable-unit (Multi-unit)	MLT	MLT	—

The tables below indicate the weighing capacity and the minimum display for each unit, depending on the balance model.

Unit	Capacity			Minimum display
	FZ-120*i* WP FX-120*i* WP	FZ-200*i* WP FX-200*i* WP	FZ-300*i* WP FX-300*i* WP	
Gram	122	220	320	0.001
Ounce (Avoir)	4.30	7.76	11.2	0.00005
Pound	0.268	0.485	0.705	0.000005
Pound/Ounce	0L 4.30oz	0L 7.76oz	0L 11.29oz	1L 0.01oz
Troy Ounce	3.92	7.07	10.2	0.00005
Metric Carat	610	1100	1600	0.005
Momme	32.5	58.6	85.3	0.0005
Pennyweight	78.4	141	205	0.001
Grain (UK)	1882	3395	4938	0.02
Tael (HK general, Singapore)	3.22	5.82	8.46	0.00005
Tael (HK jewelry)	3.25	5.87	8.54	0.00005
Tael (Taiwan)	3.25	5.86	8.53	0.00005
Tael (China)	3.90	7.04	10.2	0.00005
Tola (India)	10.4	18.8	27.4	0.0001
Messghal	26.0	46.9	68.2	0.0005

Unit	Capacity			Minimum display
	FZ-1200*i* WP FX-1200*i* WP	FZ-2000*i* WP FX-2000*i* WP	FZ-3000*i* WP FX-3000*i* WP	
Gram	1220	2200	3200	0.01
Ounce (Avoir)	43.0	77.6	112	0.0005
Pound	2.68	4.85	7.05	0.00005
Pound/Ounce	2L 11.03oz	4L 13.60oz	7L 0.88oz	1L 0.01oz
Troy Ounce	39.2	70.7	102	0.0005
Metric Carat	6100	11000	16000	0.05
Momme	325	586	853	0.005
Pennyweight	784	1414	2057	0.01
Grain (UK)	18827	33951	49383	0.2
Tael (HK general, Singapore)	32.2	58.2	84.6	0.0005
Tael (HK jewelry)	32.5	58.7	85.4	0.0005
Tael (Taiwan)	32.5	58.6	85.3	0.0005
Tael (China)	39.0	70.4	102	0.0005
Tola (India)	104	188	274	0.001
Messghal	260	469	682	0.005

4-2 Storing Units

The units or modes can be selected and stored in the function table. The sequence of displaying the units or modes can be arranged in the function table so as to fit the frequency of use.

Select a unit or mode and arrange the sequence of display as follows:

1 Press and hold the SAMPLE key until bASFnc of the function table is displayed.

2 Press the SAMPLE key several times to display Unit.

3 Press the PRINT key to enter the unit selection mode.

4 Specify a unit or mode in the order to be displayed using the following keys.

SAMPLE key	To sequentially display the units.
RE-ZERO key	To specify a unit or mode. The stabilization indicator appears when the displayed unit or mode is specified.

5 Press the PRINT key to store the units or modes. The balance displays End and then displays the next menu of the function table.

6 Press the CAL key to exit the function table. Then the balance returns to the weighing mode with the unit specified first in step 4.

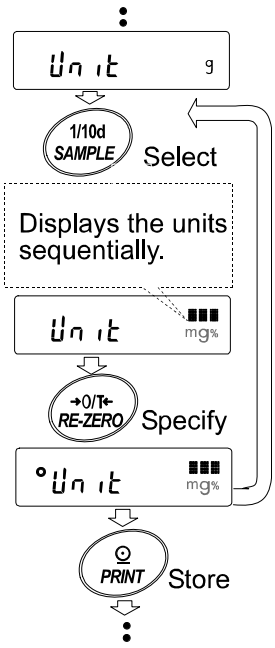

Notes

When the power is turned on, the scale displays the unit specified first in step 4.

In the weighing mode, to select a unit or mode for weighing, press the MODE key.

5. WEIGHING

5-1 Basic Operation (Gram Mode)

1 Place a container on the weighing pan, if necessary.
Press the RE-ZERO key to cancel the weight (tare).
The balance displays 0.00 g. (The decimal point position depends on the balance model.)

2 Place a sample on the pan or in the container.

3 Wait for the stabilization indicator to be displayed. Read the value.
While the stabilization indicator is on, pressing the PRINT key will output the weight value, using the RS-232C serial interface.

Note
Peripheral equipment, that is sold separately , such as a printer or a personal computer is required.

4 Remove the sample and container from the pan.

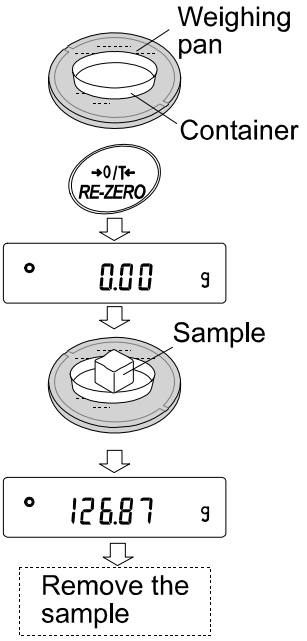

Notes
To use other units, press the MODE key and select an appropriate unit.
Press the SAMPLE key to turn on or off the minimum weighing value.

When the ON:OFF key is pressed with a container placed on the weighing pan, the balance displays 0.00 g and weighing is started,

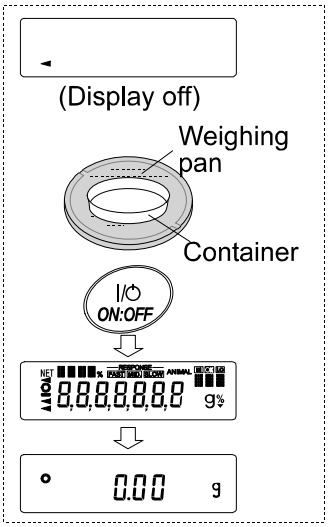

5-2 Counting Mode (PCS)

This is the mode to determine the number of objects in a sample based on the standard sample unit mass. Unit mass means the mass of one sample. The smaller the variables in each sample unit mass are, the more accurate the counting will be. The FZ-*i* WP series and the FX-*i* WP series balance is equipped with the Automatic Counting Accuracy Improvement (ACAI) function to improve the counting accuracy.

Note

If the sample unit mass variable is too large, it may cause a counting error.

Selecting the counting mode

1 Press the MODE key to select PCS (counting mode).

Storing a sample unit mass

2 Press the SAMPLE key to enter the sample unit mass storing mode.
Even in the storing mode, pressing the MODE key will switch to the next mode.

3 To select the number of samples, press the SAMPLE key several times. It may be set to 5, 10, 25, 50 or 100.

Note

A greater number of samples will yield more accurate counting result.

4 Place a container on the weighing pan, if necessary.
Press the RE-ZERO key to cancel the weight (tare).
The number specified in step 3 appears.
e.g.: 25 0 is displayed if 25 is selected in step 3.

5 Place the number of samples specified on the pan.
In this example, 25 pieces.

6 Wait for the stabilization indicator to come on.
Press the PRINT key to calculate and store the unit mass.
The balance displays 25 PCS (counting mode) and is set to count samples with this unit mass. (The sample unit mass stored, even if the AC adapter is removed, is maintained in non-volatile memory.)

To improve the accuracy of the unit mass, proceed to step 8.

Notes

If the balance judges that the mass of the samples is too light and is not adequate to be used as the unit mass, it displays Lo. In that case, store the mass by some quantity. For example, when the model with the minimum weighing value of 0.01 g is used and 10 pieces of samples weigh 0.05 g. Store 100 pieces of samples as 10 and multiply the weighing result by 10.

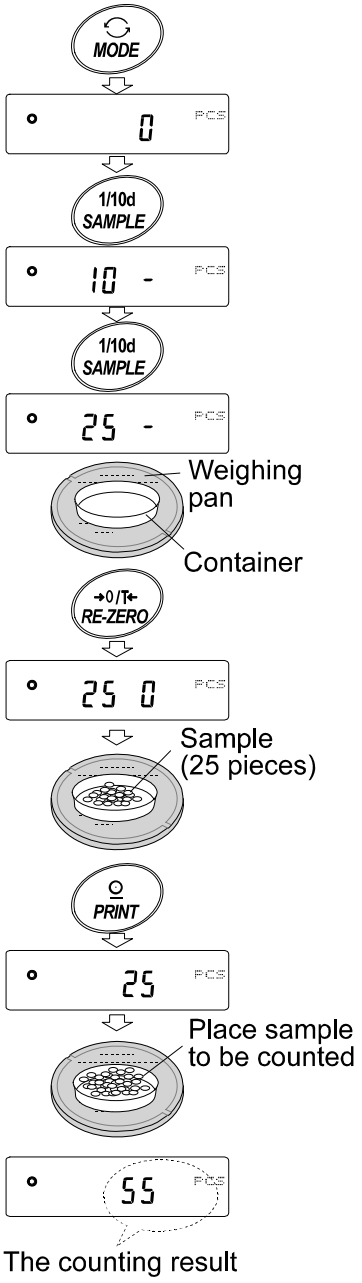

If the balance judges that the mass of the samples is too light to aquire accurate weighing, it displays an error requiring the addition of more samples to the specified number. In the example above, 50- PCS appears, requiring 25 more samples. Add 25 samples and press the PRINT key. When the unit mass is stored correctly, the balance proceeds to the counting mode.

Counting operation

7 Place the samples to be counted on the pan.
While the stabilization indicator is on, pressing the PRINT key will output the weight value, using the RS-232C serial interface.

Note
Peripheral equipment, that is sold separately , such as a printer or a personal computer is required.

Counting mode using the ACAI function

The ACAI is a function that improves the accuracy of the unit mass automatically by increasing the number of samples and averaging the unit mass variable to minimize the weighing error, as the counting process proceeds.

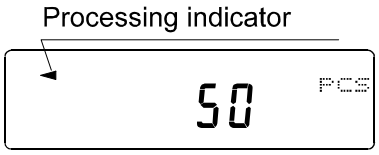

8 If a few more samples are added, the processing indicator turns on. To prevent an error, add three or more. The processing indicator does not turn on if overloaded. Try to add the same number of samples as displayed.

9 The balance re-calculates the unit mass while the processing indicator is blinking. Do not touch the balance or samples on the pan until the processing indicator turns off.

10 Counting accuracy is improved when the processing indicator turns off.

Each time the above operation is performed, a more accurate unit mass will be obtained. There is no definite upper limit of ACAI range for the number of samples exceeding 100. Try to add the same number of samples as displayed.

11 Remove all the samples used in ACAI and proceed with the counting operation using the improved unit mass.

5-3 Percent Mode (%)

This is the mode to display the weight value in percentage compared to a 100% reference mass and is used for target weighing or checking the sample variable.

Selecting the percent mode

1 Press the MODE key to select % (percent mode).

Storing the 100% reference mass

2 Press the SAMPLE key to enter the 100% reference mass storing mode.

Even in the storing mode, pressing the MODE key will switch to the next mode.

3 Place a container on the weighing pan, if necessary.
Press the RE-ZERO key to cancel the weight (tare). The balance displays 100 0 %.

4 Place the sample to be set as the 100% reference mass on the pan or in the container.

5 Press the PRINT key to store the reference mass. The balance displays 100.00 %. (The decimal point position depends on the reference value. The reference mass stored, even if the AC adapter is removed, is maintained in non-volatile memory.)

Note

If the balance judges that the mass of the sample is too light to be used as a reference, it displays Lo. Do not use the sample.

6 Remove the sample.

Reading the percentage

7 Place a sample to be compared to the reference mass on the pan. The displayed percentage is based on the 100% reference mass.
While the stabilization indicator is on, pressing the PRINT key will output the weight value, using the RS-232C serial interface.

Note

Peripheral equipment, that is sold separately , such as a printer or a personal computer is required.

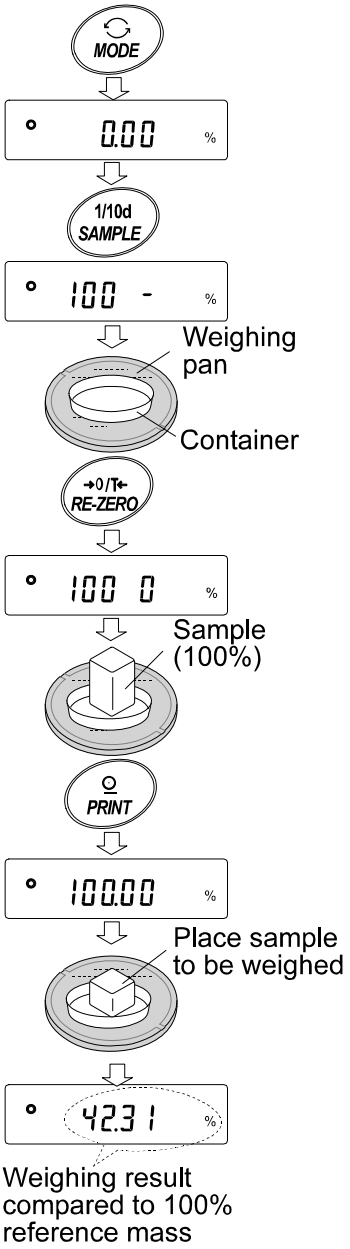

5-4 Statistical Calculation Mode

The statistical calculation mode statistically calculates the weight data, and displays or outputs the results. To use the statistical calculation mode, set the "Application function (APF)" parameter of "Application (AP Fnc)" in the function table to "2", as described below.
Statistical items available are number of data, sum, maximum, minimum, range (maximum-minimum), average, standard deviation and coefficient of variation. What statistical items to output can be selected from the three modes in the function table.

- The wrong data input can be canceled by the key operation, if immediately after the input.
- Turning the balance off will delete the statistical data.
- The standard deviation and coefficient of variation are obtained by the equation below:

Standard deviation= $\sqrt{\dfrac{N\cdot\Sigma(X_i)^2-(\Sigma X_i)^2}{N\cdot(N-1)}}$ where Xi is the i-th weight data, N is number of data.

Coefficient of variation (CV)= $\dfrac{\text{Standard deviation}}{\text{Average}}$ x 100 (%)

Relative error of maximum value = $\dfrac{\text{Maximum value} - \text{Average}}{\text{Average}}$ x 100 (%)

Relative error of minimum value = $\dfrac{\text{Minimum value} - \text{Average}}{\text{Average}}$ x 100 (%)

5-4-1 Getting Started
Switching to the Statistical Function Mode (Changing The Function Table)

1 Press and hold the SAMPLE key until bASFnc of the function table is displayed, then release the key.

2 Press the SAMPLE key several times to display AP Fnc.

3 Press the PRINT key to display APF 0.

4 Press the RE-ZERO key to display APF 2.

To select statistical items to output, go to step 5.
To store the statistical function mode setting, go to step 7.
To disable the statistical calculation mode, press the RE-ZERO key to select APF 0.

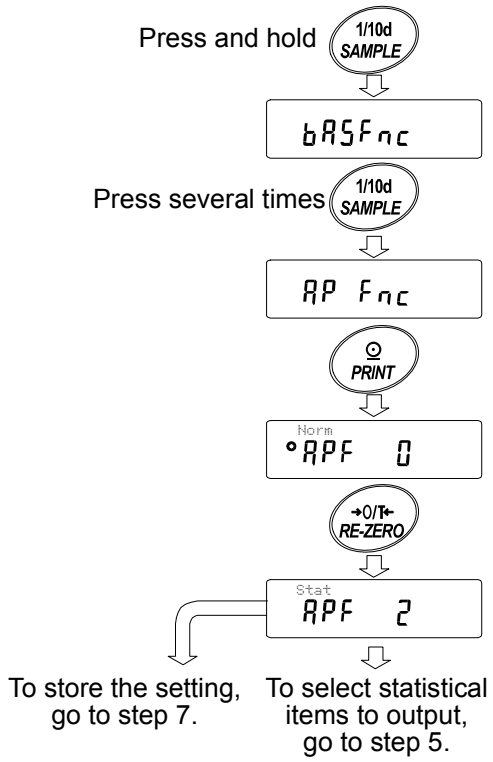

Selecting the statistical items to output

5 Press the SAMPLE key to display StAF 0.

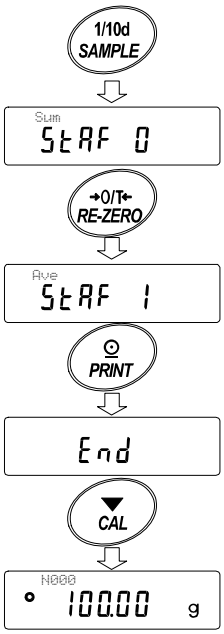

6 Press the RE-ZERO key to select the output items.
In the example, StAF 1 is selected to output the number of data, sum, maximum, minimum, range (maximum-minimum) and average.

Parameter	Description
▪ 0	Number of data, sum
1	Number of data, sum Maximum, minimum, range (maximum – minimum), average
2	Number of data, sum Maximum, minimum, range (maximum – minimum), average, Standard deviation, coefficient of variation
3	Number of data, sum Maximum, minimum, range (maximum – minimum), average, Standard deviation, coefficient of variation Relative error of maximum value, relative error of minimum value

7 Press the PRINT key to store the setting.

8 Press the CAL key to return to the weighing mode.

Selecting the unit

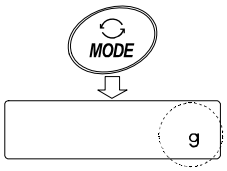

9 Press the MODE key to select the unit to be used for the statistical calculation mode. In the example shown at the right, gram (g) is selected.

Notes

Selecting the unit using the MODE key is not available after the data is entered. In this case, clear the data as described on page 24 and select the unit using the MODE key.

When the unit used for the statistical calculation mode is to be enabled upon power-on, select the unit in "Unit (Unit)" of the function table beforehand.

5-4-2 Using The Statistical Calculation Mode
Entering data for statistical calculation

Use the following keys to operate the statistical calculation mode.

MODE key..... ▪ When the data is entered, moves between the displaying items (weighing mode, statistical results and data operation) each time the key is pressed.
▪ When no data has been entered, selects the unit.

SAMPLE key..... ▪ Turns the minimum display on or off, in the weighing mode.

RE-ZERO key..... ▪ Sets the display to zero in the weighing mode.

PRINT key..... ▪ Outputs the data number and the weight data and includes the weight data to statistical calculation in the weighing mode. (Output is not in the data format specified in the function table because of the data number added.)
▪ Outputs the statistical results while the statistical results are displayed. (Output is not in the data format specified in the function table.)

CAL key..... ▪ Returns to the weighing mode.

1 Press the RE-ZERO key to set the display to zero.

2 Place the sample on the weighing pan and wait for the stabilization indicator to turn on.

3 Press the PRINT key to add the data displayed to statistical calculation. The number of data on the upper left of the display increases by 1.

4 Repeat steps 1 to 3 for each weighing.

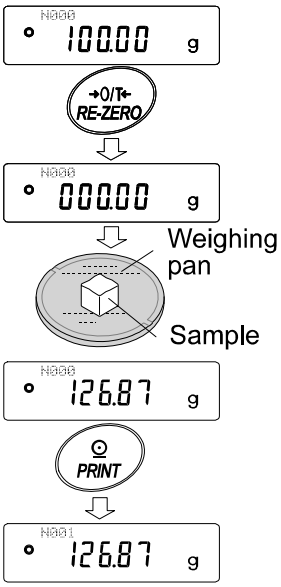

Outputting the statistical results

5 Each time the MODE key is pressed, the display changes: the results as selected in "Statistical function mode output items (StAF)", CAnCEL and CLEAr.

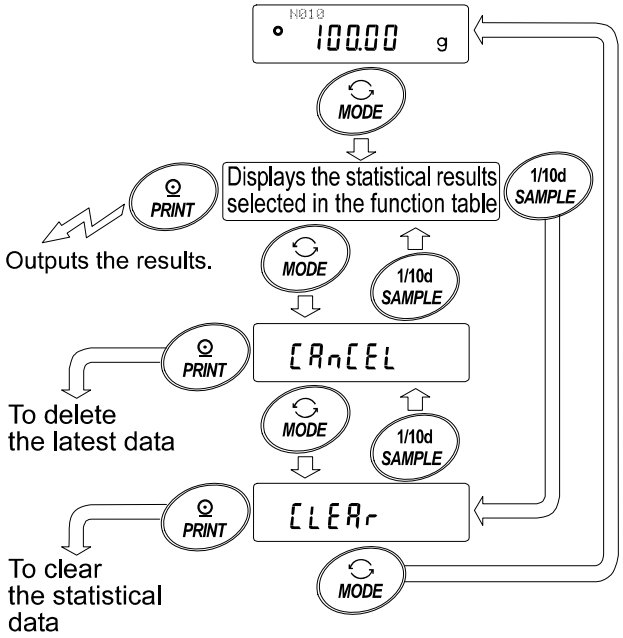

Notes

When the number of data is 1, the standard deviation and coefficient of variation are displayed as - - - - - - -.

When the average is 0, the coefficient of variation is displayed as - - - - - - -.

Statistical items are indicated on the upper left of the display using the following symbols.

Symbol	Statistical item
SUM	Sum
MAX	Maximum
MIN	Minimum
R	Range (Maximum – minimum)
AVE	Average
SD	Standard deviation
CV	Coefficient of variation
MAX %	Relative error of maximum value
MIN %	Relative error of minimum value

6 While the results are displayed, press the PRINT key to output the results.

Output example

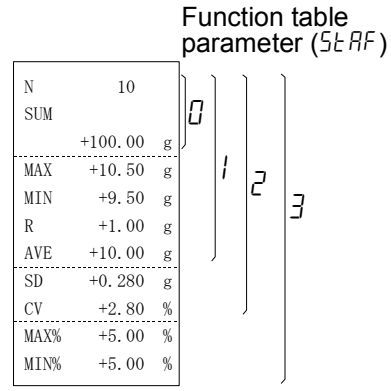

Deleting the latest data

When the wrong data is entered, it can be deleted and excluded from statistical calculation. Only the latest data can be deleted.

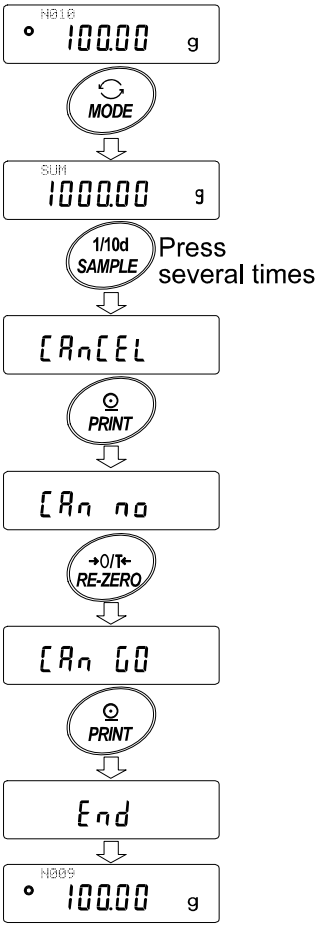

1 In the weighing mode, press the MODE key, and then press the SAMPLE key several times to display CAnCEL.

2 Press the PRINT key to display CAn no.

3 Press the RE-ZERO key to display CAn Go.

4 Press the PRINT key to delete the latest data and exclude it from statistical calculation.
The number of data decreases by 1 when the balance returns to the weighing mode.

Clearing the statistical data

All the statistical data will be deleted and the number of data will be 0 (zero).

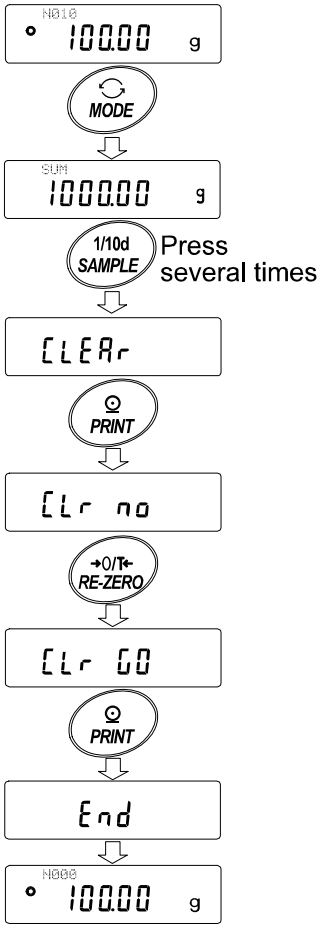

1 In the weighing mode, press the MODE key, and then press the SAMPLE key several times to display CLEAr.

2 Press the PRINT key to display CLr no.

3 Press the RE-ZERO key to display CLr Go.

4 Press the PRINT key to delete the statistical data.
The number of data becomes 0 (zero) when the balance returns to the weighing mode.

5-5 Statistical Calculation Mode (Example of Use)

Here, as an example of use of the statistical calculation mode, mixing of the multiple formulae such as medicine is described. The mixing process is recorded using the balance and the printer.
In the example, the FX-3000*i* WP and the AD-8121B (dump print mode) are connected using the RS-232C serial interface.

5-5-1 Getting Started
Changing the function table

Changes : □ To enable the statistical calculation mode
□ To enable "Zero after output"

Enabling the statistical calculation mode

1 Enter the function table menu.
Press and hold the SAMPLE key until bASFnc of the function table is displayed, then release the key.

2 Select the application function.
Press the SAMPLE key several times to display AP Fnc.
Then, press the PRINT key to display °APF 0.

3 Change the application function parameter to "2".
Press the RE-ZERO key to display APF 2.
Press the PRINT key to confirm the change.
After End, bASFnc is displayed.

Enabling "Zero after output"

4 Select "Zero after output".
Press the SAMPLE key several times to display dout.
Then, press the PRINT key to display °Prt 0, and press the SAMPLE key several times to display °Ar-d 0.

5 Enable "Zero after output".
Press the RE-ZERO key to display Ar-d 1.
Then, press the PRINT key to confirm the change. After End, SiF is displayed.

Returning to the weighing mode

6 Press the CAL key to return to the weighing mode.

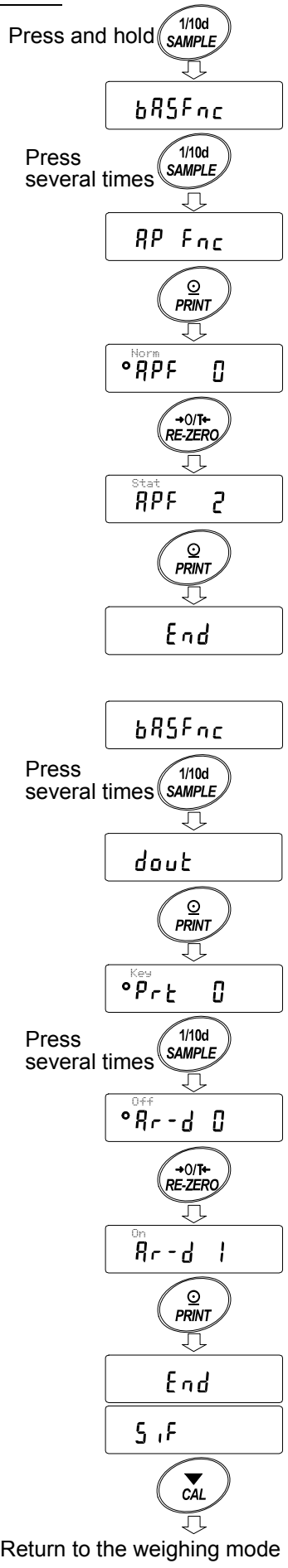

5-5-2 Using The Statistical Calculation Mode

1 Press the RE-ZERO key to set the display to zero.

2 Place a container on the weighing pan.
Press the PRINT key to cancel the weight (tare). The balance displays 0.00 g. (Storing the tare value)
The tare value data is output when the peripheral output equipment is connected.

3 Weigh formula 1 and press the PRINT key. The balance displays 0.00 g. (Storing the weight value of formula 1)
The weight value data is output when the peripheral output equipment is connected.

4 Weigh formula 2 and press the PRINT key. The balance displays 0.00 g. (Storing the weight value of formula 2)
The weight value data is output when the peripheral output equipment is connected.

5 When there are some more formulae to be added, repeat step 4.

6 After mixing is complete, press the MODE key to display the statistical results.

7 Press the PRINT key to output the number of data saved including the tare value and the total weight.

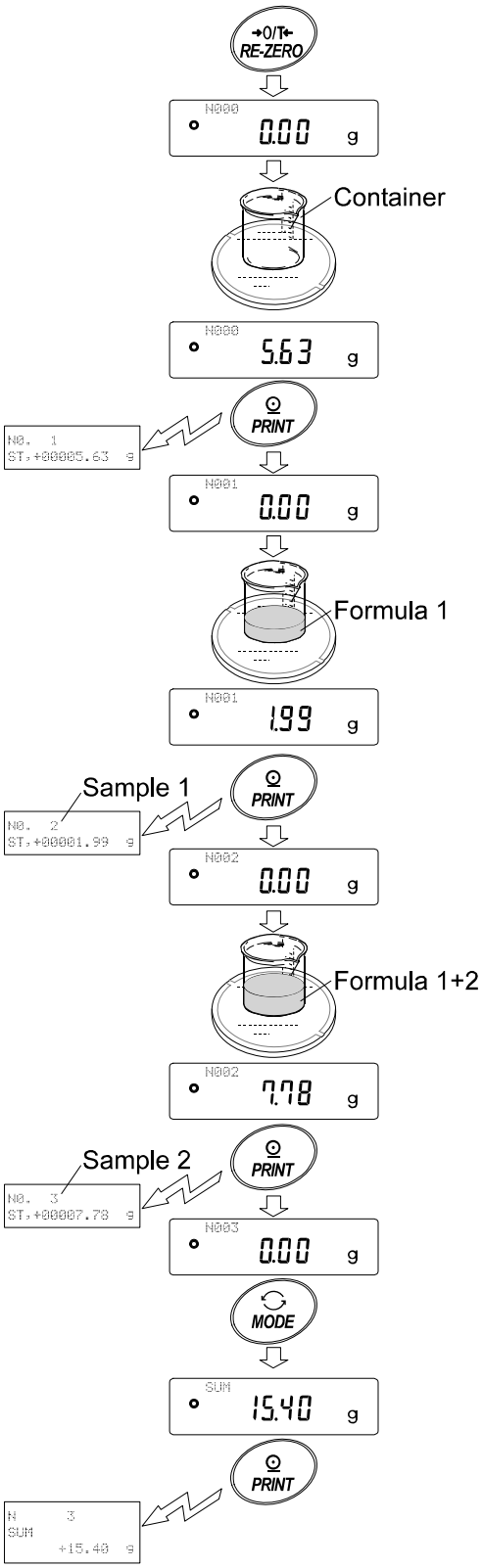

Output example

```
No.   1
ST,+00005.63   g  -------Tare value
No.   2
ST,+00001.99   g  -------Formula 1
No.   3
ST,+00007.78   g  -------Formula 2

N       3
SUM
      +15.40   g  -------Total weight
```

6. RESPONSE ADJUSTMENT

This function stabilizes the weight value, reducing the influence on weighing that is caused by drafts and vibration at the place where the balance is installed.
The function has three stages as follows and can be changed by simple key operation.

Indicator	Description
FAST	Fast response, but prone to drafts and vibration. Good for target weighing.
MID.	⬍
SLOW	Slow response, but strong against drafts and vibration. Good for weighing which requires a stable display.

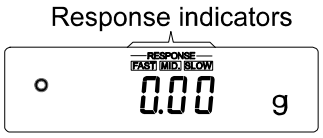

Operation

1 Press and hold the MODE key until RESPONSE is displayed. And then, release the key.

2 Press the MODE key to select a rate of the response adjustment. Either FAST, MID. or SLOW can be selected.

3 After a few seconds of inactivity, or when the PRINT key is pressed, the balance displays End. Then, it returns to the weighing mode and displays the updated response indicator. The response indicator remains displayed for a while.

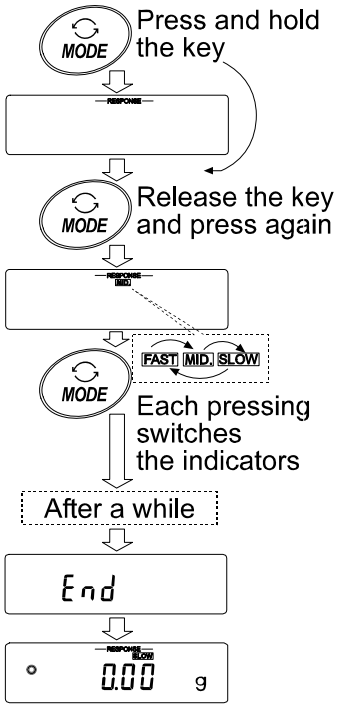

Note

Setting the response rate automatically changes the "Condition (Cond)" and "Display refresh rate (SPd)" parameters of "Environment, Display (bASFnc)" in the function table, as shown below:

Indicator	Cond (Condition)	SPd (Display refresh rate)
FAST	0	2 (20 times/second)
MID.	1	0 (5 times/second)
SLOW	2	0 (5 times/second)

When the balance is to be used with other setting combinations, set each parameter in the function table.

7. CALIBRATION

7-1 Calibration Mode

The FZ-*i* WP series and the FX-*i* WP series balance has the following two modes.

- Calibration using the internal mass (One-touch calibration, only for the FZ-*i* WP series)
- Calibration using an external weight
- Calibration test using an external weight (Calibration test does not perform calibration.)

Terms

The following terms are defined as follows:

External weight = A weight that you have. Referred to as a calibration weight when used for calibration.
Calibration weight = A weight used for calibration
Target weight = An external weight used for calibration test

Caution

- Calibration adjusts the balance for accurate weighing.
  Besides periodic calibration and before each use, perform calibration when:
  - The balance is installed for the first time.
  - The balance has been moved.
  - The ambient environment has changed.
- Do not allow vibration or drafts to affect the balance during calibration.
- To output the data for GLP / GMP compliant using the RS-232C serial interface, set "GLP output (inFo)" of "Data output (dout)". For details, refer to "9. FUNCTION TABLE".
- Calibration test is available only when "GLP output (inFo)" of "Data output (dout)" is set to " 1" or "2".

Caution on using an external weight

- The accuracy of an external weight will influence the accuracy of weighing. Select an appropriate weight as listed below:

Model		Usable calibration weight	Adjustable range
FZ-120*i* WP	FX-120*i* WP	***100 g***, 50 g	-0.050 g to +0.050 g
FZ-200*i* WP	FX-200*i* WP	***200 g***, 100 g, 50 g	
FZ-300*i* WP	FX-300*i* WP	300 g, ***200 g***, 100 g, 50 g	
FZ-1200*i* WP	FX-1200*i* WP	***1000 g***, 500 g	-0.50 g to +0.50 g
FZ-2000*i* WP	FX-2000*i* WP	***2000 g***, 1000 g, 500 g	
FZ-3000*i* WP	FX-3000*i* WP	3000 g, ***2000 g***, 1000 g, 500 g	

The calibration weight in ***bold Italic*** type: factory setting
The calibration weight value can be adjusted within the range above.

Display

- This indicator means "the balance is measuring calibration data". Do not allow vibration or drafts to affect the balance while this indicator is displayed.

7-2 Calibration Using the Internal mass (One-Touch Calibration, only for FZ-*i*WP series)

This function calibrates the balance using the internal mass.
The only operation required is to press the CAL key

Operation

1 Connect the AC adapter and warm up the balance for at least 30 minutes with nothing on the weighing pan.

2 After carefully installing the small breeze break, press the CAL key.

3 The balance displays CAL in and performs calibration using the internal mass. Do not allow vibration or drafts to affect the balance.

4 The balance displays End after calibration. If the "GLP output (inFo)" parameter of the function table is set to "1" or "2", the balance displays GLP and outputs "Calibration Report" using the RS-232C interface or stores the data in memory. For details on the calibration report format, refer to "10-2 GLP Report".

5 The balance will automatically return to the weighing mode after calibration.

About the internal mass

The mass of the internal mass may change due to corrosion or other damage caused by the operating environment, or due to aging. Check the internal mass periodically. Correct the internal mass value as necessary. For details, refer to "Correcting the internal mass value" of an additional manual.
To maintain the weighing accuracy, perform the calibration using an external weight periodically, as described below.

7-3 Correcting the Internal Mass Value: 1 (Only for FZ-*i* WP series)

- The FZ-*i* WP series balance can correct the internal mass value using an external weight.
  Method 1: Calibrate the balance using the internal mass. Measure the external weight. Calculate the correction value. And store it in the balance.

- The adjustable range of the internal mass value is as follows:

Model	Correction reference value	Adjustable range
FZ-120*i* WP	100 g	-0.050 g to +0.050 g
FZ-200*i* WP / 300*i* WP	200 g	
FZ-1200*i* WP	1000 g	-0.50 g to +0.50 g
FZ-2000*i* WP / 3000*i* WP	2000 g	

Operation

Example : Correcting the weight value by +0.003 g in 100 g using the FZ-120*i* WP
If correcting the weight value by +0.003 g in 50 g, use the correction value of +0.006 g as the correction reference value is 100 g..

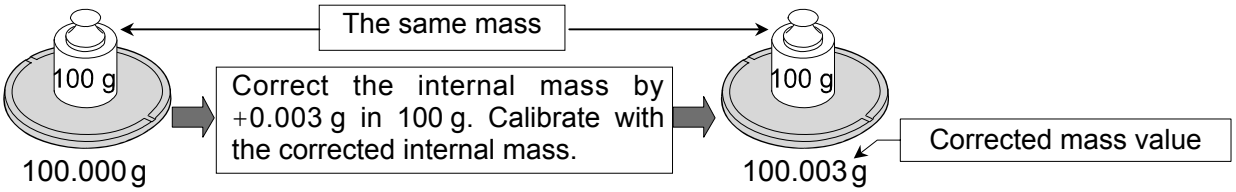

1 Perform calibration using the internal mass (one-touch calibration). Place the external weight on the FZ-120*i* WP weighing pan to obtain the correction value.

2 With the factory setting, the balance can not correct the internal mass value. Refer to "8. FUNCTION SWITCH AND INITIALIZATION" and set the internal mass value correction switch to 1.

3 In the weighing mode, press and hold the SAMPLE key to display bASFnc.

4 Press the SAMPLE key several times until CS in 1 is displayed.
If CS in 1 is not displayed, perform step 2.

5 Press the PRINT key.
Correct the internal mass value using the following keys:

RE-ZERO key	To increase the value by one.
MODE key	To decrease the value by one.
PRINT key	To store the correction value and display the next menu item of the function table.
CAL key	To cancel the operation and return to the weighing mode.

The balance displays -50 digits after +50 digits.

6 Press the CAL key to return to the weighing mode.

7 Press the CAL key to perform calibration using the internal mass.

8 Confirm that the internal mass value has been corrected properly by placing the external weight on the weighing pan.
If the internal mass value has not been corrected properly, repeat the procedure to adjust the correction value.

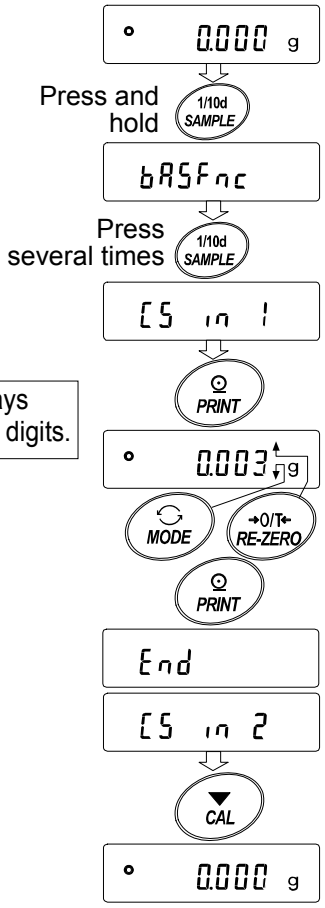

7-4 Correcting the Internal Mass Value: 2 (Only for FZ-*i* WP series)

- The FZ-*i* WP series balance can correct the internal mass value using an external weight.
  Method 2: Calibrate the balance using the external weight. The balance performs automatic calibration using the internal mass, corrects the internal mass value and stores it in the balance. The corrected mass value is maintained in non-volatile memory even if the AC adapter is removed.
- The usable calibration weights and the adjustable range are as follows:

Model	Usable calibration weight	Adjustable range
FZ-120*i* WP	**100 g**, 50 g	-0.050 g to +0.050 g
FZ-200*i* WP	**200 g**, 100 g, 50 g	
FZ-300*i* WP	300 g, **200 g**, 100 g, 50 g	
FZ-1200*i* WP	**1000 g**, 500 g	-0.50 g to +0.50 g
FZ-2000*i* WP	**2000 g**, 1000 g, 500 g	
FZ-3000*i* WP	3000 g, **2000 g**, 1000 g, 500 g	

The calibration weight in bold type: factory setting

The cal ibration weight value can be adjusted within the range above.

Operation

1 With the factory setting, the balance can not correct the internal mass value. Refer to "8. FUNCTION SWITCH AND INITIALIZATION" and set the internal mass value correction switch to /.

2 In the the weighing mode, press an d hold the SAMPLE key to display bASFnc.

3 Press the SAMPLE key several times until CS in 2 is displayed.
If CS in 2 is not displayed, perform step 1.

4 Press the PRINT key to display CAL 0.
Refer to "8-5 Calibration Using an External Weight", to perform the calibration.

5 After calibration, remove the weight. The balance displays rEAdy ?. Place the accessory breeze break on the balance and press the PRINT key.

6 CAL. SET is displayed and the balance corrects the internal mass value automatically

7 After correcting the internal mass value, the balance displays CAL. in, and performs the calibration automatically using the corrected internal mass value.

8 The balance displays End and returns to the weighing mode.

9 Confirm that the internal mass value has been corrected properly by placing the external weight used for the correction procedure on the weighing pan.
If the internal mass value has not been corrected properly, repeat the procedure to adjust the correction value.

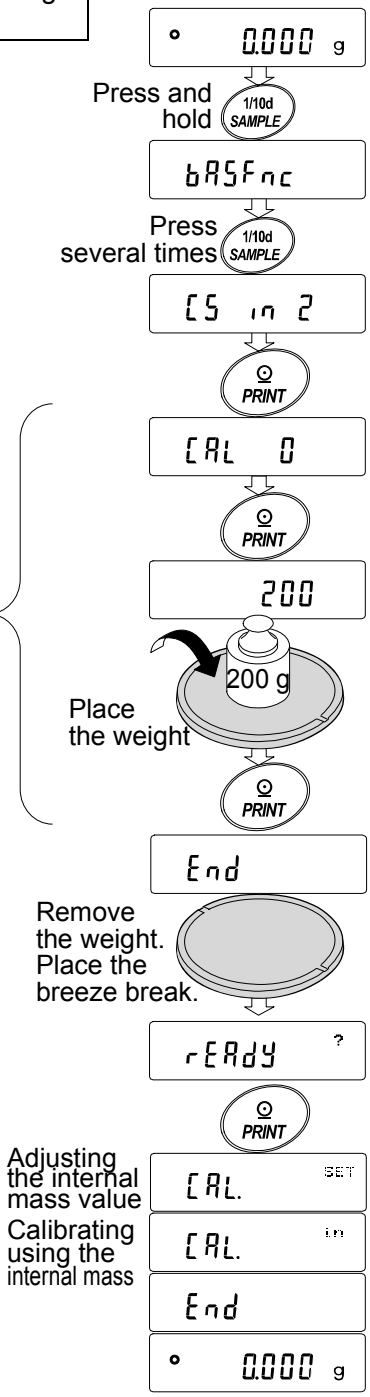

7-5 Calibration Using an External Weight

This function calibrates the balance using an external weight.

Operation

1 Connect the AC adapter and warm up the balance for at least 30 minutes with nothing on the pan.

2 Press and hold the CAL key until CAL out is displayed, and then release the key.

3 The balance displays CAL 0.

- If you want to change the calibration weight (a list of usable weights is shown on page 28), press the SAMPLE key and proceed to step 4.
- If you use the calibration weight value stored in the balance, proceed to step 5.

4 Specify the calibration weight value as follows:

SAMPLE key	To switch the display condition to: "All of the segments blinking" (calibration weight selection mode) or "The last two digits blinking" (value adjustment mode).
RE-ZERO key	(To increase the value)
MODE key	(To decrease the value) To select the calibration weight or adjust the value.
PRINT key	To store the new weight value. Even if the AC adapter is removed, the data is maintained in non-volatile memory.
CAL key	To cancel the operation and return to CAL 0.

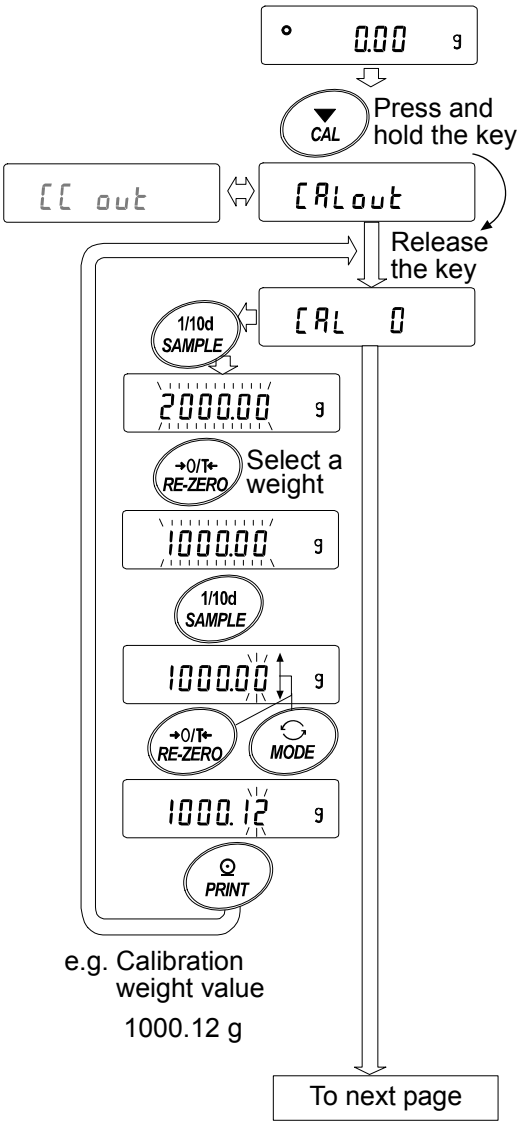

5 Confirm that there is nothing on the pan and press the PRINT key. The balance measures the zero point. Do not allow vibration or drafts to affect the balance. The balance displays the calibration weight value.

6 Place the displayed calibration weight on the pan and press the PRINT key. The balance measures the calibration weight. Do not allow vibration or drafts to affect the balance.

7 The balance displays End. Remove the weight from the pan.

8 When the GLP output is set, the balance displays GLP and outputs “Calibration Report”.

9 The balance will automatically return to the weighing mode.

10 Place the calibration weight on the pan and confirm that the value displayed is within ±2 digits of the specified value. If it is not within the range, check the ambient conditions such as breeze and vibration, also check the weighing pan. Then, repeat steps 1 to 9.

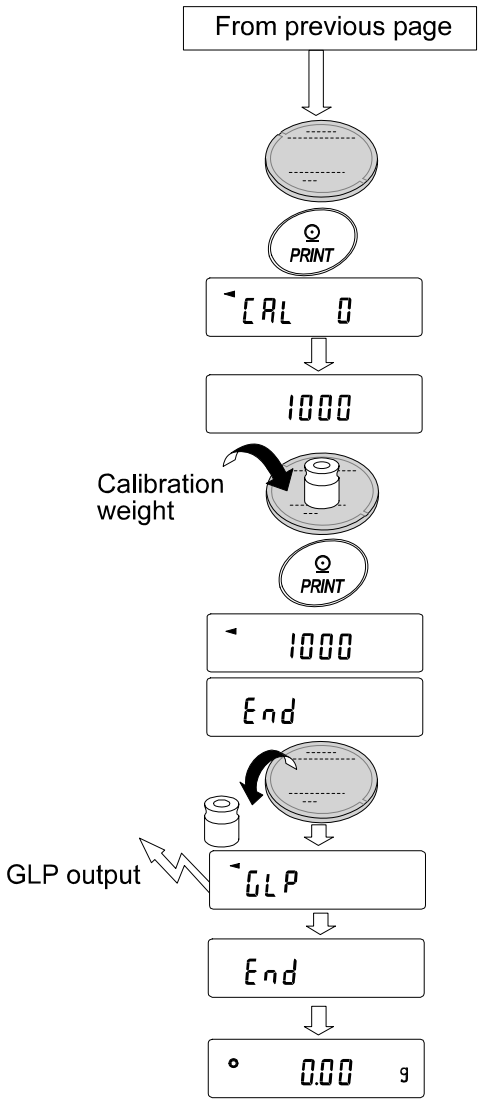

7-6 Calibration Test Using an External Weight

This function tests the balance weighing accuracy using an external weight and outputs the result. This is available only when the “GLP output (InFo)” parameter is set to “ 1” or “2”. (Calibration test does not perform calibration.)

Operation

1 Connect the AC adapter and warm up the balance for at least 30 minutes with nothing on the pan.

2 Press and hold the CAL key until CCout is displayed, and then release the key.

3 The balance displays CC 0.

- If you want to change the target weight (a list of usable weights is shown on page 28), press the SAMPLE key and proceed to step 4.
- If you use the target weight value stored in the balance, proceed to step 5.

4 Specify the target weight value as follows:

SAMPLE	key	To switch the display condition to: “All of the segments blinking” (target weight selection mode) or “The last two digits blinking” (value adjustment mode).
RE-ZERO	key	(To increase the value)
MODE	key	(To decrease the value) To select the target weight or adjust the value.
PRINT	key	To store the new weight value. Even if the AC adapter is removed, the data is maintained in non-volatile memory.
CAL	key	To cancel the operation and return to CC 0.

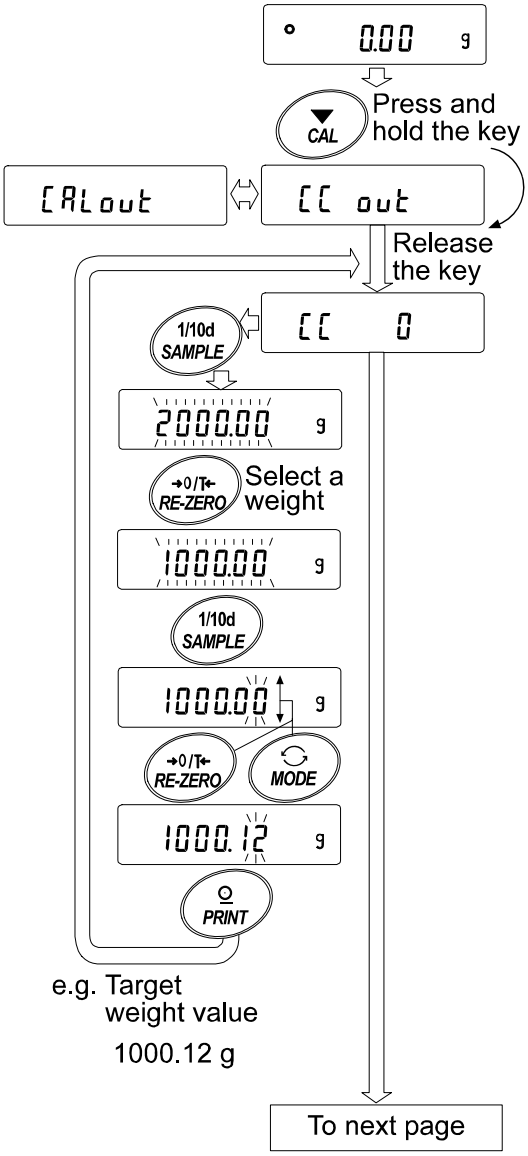

5 Confirm that there is nothing on the pan and press the PRINT key. The balance measures the zero point and displays the measured value. Do not allow vibration or drafts to affect the balance.
The balance displays the target weight value.

6 Place the displayed target weight on the pan and press the PRINT key. The balance measures the target weight and displays the measured value. Do not allow vibration or drafts to affect the balance.

7 The balance displays End. Remove the weight from the pan.

8 When the GLP output is set, the balance displays GLP and outputs “Calibration Test Report”.

9 The balance will automatically return to the weighing mode.

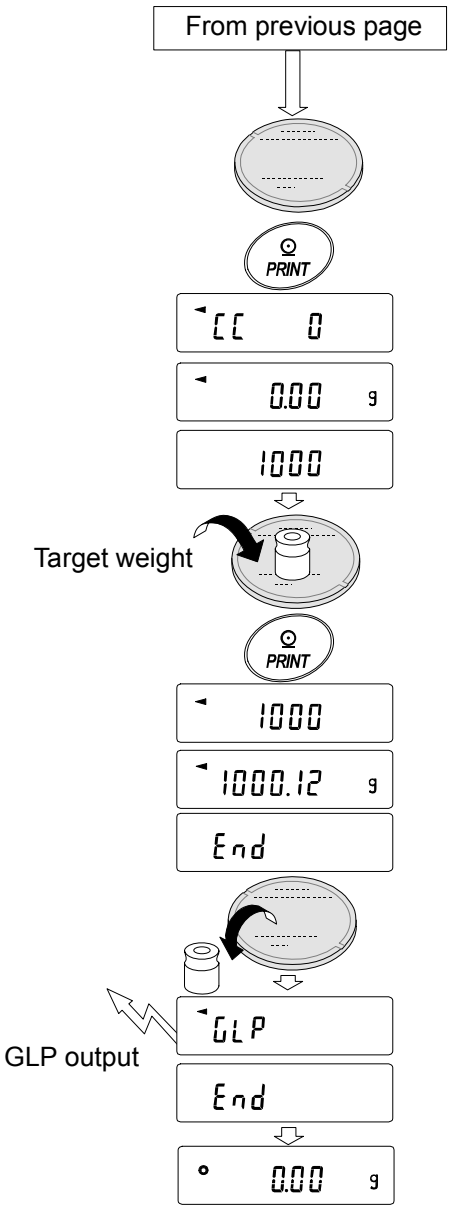

8. FUNCTION SWITCH AND INITIALIZATION

8-1 Permit or Inhibit

The balance stores parameters that must not be changed unintentionally. There are two switches for the purpose of protecting these parameters. Each switch can select either “permit” or “inhibit”. The “inhibit” protects parameters against unintentional operations.

Switches (FZ-*i*WP series)

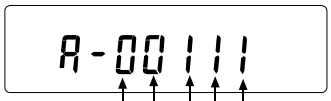

(The display shown left indicates the factory settings.)

Function table
- 0 To inhibit changes to the function table
- 1 To permit changes to the function table

Calibration using the internal mass (One-touch calibration)
- 0 To inhibit calibration using the internal mass
- 1 To permit calibration using the internal mass

Calibration using an external weight
- 0 To inhibit calibration using an external weight
- 1 To permit calibration using an external weight

Not used

Internal mass correction
- 0 To inhibit correction
- 1 To permit correction

Switches (FX-*i*WP series)

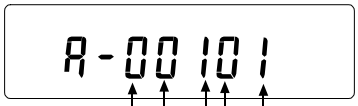

(The display shown left indicates the factory settings.)

Function table
- 0 To inhibit changes to the function table
- 1 To permit changes to the function table

Not used

Calibration using an external weight
- 0 To inhibit calibration using an external weight
- 1 To permit calibration using an external weight

Not used

Not used

Operation

1 Press the ON:OFF key to turn off the display.

2 While pressing and holding the PRINT key and the SAMPLE key, press the ON:OFF key. The balance displays PS.

3 Press the PRINT key. Then the balance displays the function switches.

4 Set the switches using the following keys.

SAMPLE key	To select the switch to change the parameter.
RE-ZERO key	To change the parameter of the switch selected.
	0: To inhibit changes. 1: To permit changes
PRINT key	To store the new parameter and return to the weighing mode.
CAL key	To cancel the operation (CLr is displayed.) To return to the weighing mode, press the CAL key once again.

8-2 Initializing the Balance

This function returns the following parameters to factory settings.

- Calibration data
- Function table
- The sample unit mass value (counting mode), 100% reference mass value (percent mode)
- External calibration weight
- Function switch settings
- Statistical data

Note

Be sure to calibrate the balance after initialization.

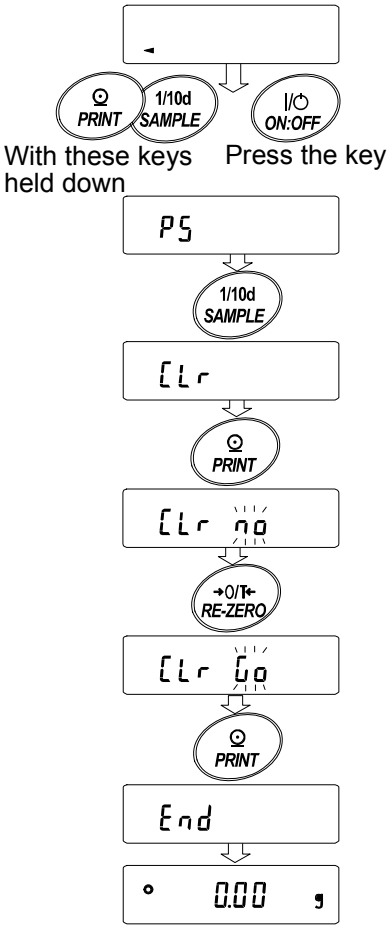

Operation

1 Press the ON:OFF key to turn off the display.

2 While pressing and holding the PRINT key and the SAMPLE key, press the ON:OFF key.
The balance displays PS.

3 Press the SAMPLE key to display CLr.

4 Press the PRINT key.
To cancel this operation, press the CAL key.

5 Press the RE-ZERO key.

6 Press the PRINT key to initialize the balance.
The balance will automatically return to the weighing mode.

9. FUNCTION TABLE

The function table reads or rewrites the parameters that are stored in the balance. These parameters stored, even if the AC adapter is removed, are maintained in non-volatile memory.

9-1 Structure and Sequence of the Function Table

The function table menu consists of two layers. The first layer is the “Class” and the second layer is the “Item”. Each item stores a parameter.

Example

This example sets “Auto print mode A” for “Data output mode” and “100 digits” for “Auto print difference”.

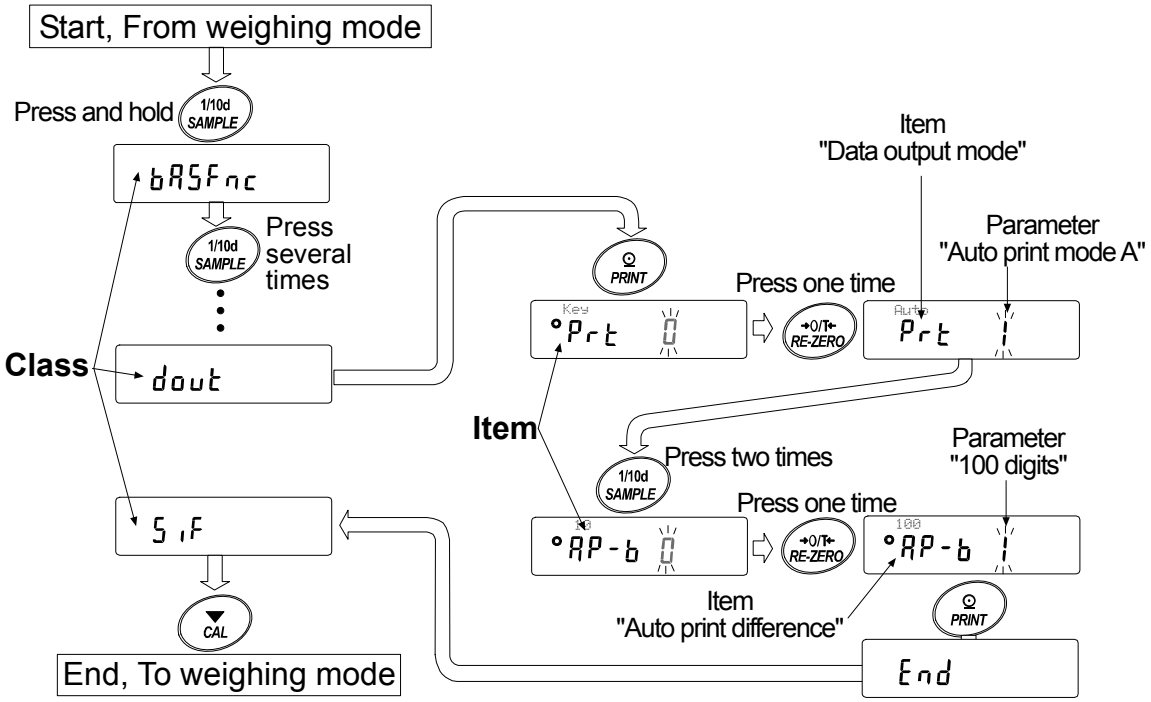

9-2 Display and Keys

Display/Key	Description
°	The symbol “O” indicates that the parameter displayed is in effect.
1/10d SAMPLE	When pressed and held in the weighing mode, enters the function table mode. Selects the class or item in the function table mode.
→0/T← RE-ZERO	Changes the parameter.
PRINT	When a class is displayed, moves to an item in the class. When an item is displayed, stores the new parameter and displays the next class.
CAL	When an item is displayed, cancels the new parameter and displays the next class. When a class is displayed, exits the function table mode and returns to the weighing mode.

9-3 Details of the Function Table

Class	Item and Parameter		Description	
bASFnc Environment Display	Cond Condition	0	Fast response, sensitive value FAST	With "HoLd 1", sets the averaging time.
		▪ 1	MID	
		2	Slow response, stable value SLOW	
	St-b Stability band width	0	Stable range is ±1 digit	The stabilization indicator illuminates when the display fluctuation is within the range. With "HoLd 1", sets the stabilization range.
		▪ 1		
		2	Stable range is ±3 digits	
	HoLd Hold function	▪ 0	OFF	Holds the display when stable in animal mode. With "HoLd 1", ANIMAL turns on.
		1	ON	
	trc Zero tracking	0	OFF	Keeps zero display by tracking zero drift.
		▪ 1	Normal	
		2	Strong	
		3	Very strong	
	SPd Display refresh rate	▪ 0	5 times/second	Period to refresh the display
		1	10 times/second	
		2	20 times/second	
	Pnt Decimal point	▪ 0	Point (.)	Decimal point format
		1	Comma (,)	
	P-on Auto display-ON	▪ 0	OFF	Turns on the weighing mode display when the AC adapter is connected.
		1	ON	
	PoFF Auto display-OFF	▪ 0	OFF	Turns off the display after 10 minutes of inactivity.
		1	ON (10 minutes)	
	rnG Display at start	▪ 0	Displays	Select whether or not to display the minimum weighing value at weighing start.
		1	Does not display	
	bEEP Beep	0	Does not sound	Select whether or not to sound the beep when operating on keys.
		▪ 1	Sounds	
CL AdJ * Clock		Refer to "9-10 Clock and calendar function".		Confirms and sets the time and date. The time and date are added to output data.
CP Fnc Comparator	CP Comparator mode	▪ 0	No comparison	
		1	Comparison, excluding "near zero" when stable value or overloaded	
		2	Comparison, including "near zero" when stable value or overloaded	
		3	Continuous comparison, excluding "near zero"	
		4	Continuous comparison, including "near zero"	
	bEP- LO buzzer	▪ 0	OFF	
		1	ON	
	bEP- OK buzzer	▪ 0	OFF	
		1	ON	
	bEP- HI buzzer	▪ 0	OFF	
		1	ON	
CP Hi Upper limit		Refer to "9-9 Comparator Function".		
CP Lo Lower limit				

▪: Factory settings. Digit is a unit of minimum weighing value
* : Only for the FZ-*i* WP series

Class	Item and Parameter		Description	
dout Data output	Prt Data output mode	▪ 0	Key mode	Accepts the PRINT key only when the display is stable.
		1	Auto print mode A (Reference = zero)	Outputs data when the display is stable and conditions of AP-P, AP-b and the reference value are met.
		2	Auto print mode B (Reference = last stable value)	
		3	Stream mode	Outputs data continuously.
		4	Key mode B (Immediately)	Accepts the PRINT key regardless of the display condition.
		5	Key mode C (When stable)	Accepts the PRINT key immediately when the display is stable, or waits for the display to be stable when not.
		6	Interval output mode	Uses interval output mode.
	AP-P Auto print polarity	▪ 0	Plus only	Displayed value>Reference
		1	Minus only	Displayed value<Reference
		2	Both	Regardless of displayed value
	AP-b Auto print difference	▪ 0	10 digits	Difference between reference value and displayed value
		1	100 digits	
		2	1000 digits	
	int Interval time	0	Every measurement	Interval time for the interval output mode (With Prt 6)
		▪ 1	2 seconds	
		2	5 seconds	
		3	10 seconds	
		4	30 seconds	
		5	1 minute	
		6	2 minute	
		7	5 minute	
		8	10 minute	
	S-id ID number output	▪ 0	No output	Selects whether or not the ID number is output.
		1	*Output*	
	S-td* Time/Date output	▪ 0	No output	
		1	Time only	
		2	Date only	
		3	Time and date	
	PUSE Data output pause	▪ 0	No pause	Selects the data output interval.
		1	Pause (1.6 seconds)	
	At-F Auto feed	▪ 0	Not used	Selects whether or not automatic feed is performed.
		1	Used	
	inFo GLP output	▪ 0	No output	Selects GLP output method.
		1	AD-8121 format	
		2	General data format	
	Ar-d Zero after output	▪ 0	Not used	Adjusts zero automatically after data is output
		1	Used	

▪ Factory settings. Digit is a unit of minimum weighing value
* : Only for the FZ-*i* WP series

Class	Item and Parameter		Description	
S iF Serial interface	bPS Baud rate	0	600 bps	
		1	1200 bps	
		▪ 2	2400 bps	
		3	4800 bps	
		4	9600 bps	
		5	19200 bps	
	btPr Data bit, parity bit	▪ 0	7 bits, even	
		1	7 bits, odd	
		2	8 bits, none	
	CrLF Terminator	▪ 0	CR LF	CR: ASCII code 0Dh LF: ASCII code 0Ah
		1	CR	
	tYPE Data format	▪ 0	A&D standard format	Refer to “9-6 Description of the Item “Data Format””.
		1	DP format	
		2	KF format	
		3	MT format	
		4	NU format	
		5	CSV format	
	t-UP Timeout	0	No limit	Selects the wait time to receive a command.
		▪ 1	1 second	
	ErCd AK, Error code	▪ 0	No output	AK:ASCII code 06h
		1	Output	
ALt Programmable-unit (Multi-unit)		Sets an arbitrary coefficient.		Available only when programmable-unit mode is selected.
Unit Unit		Refer to “4. WEIGHING UNITS”.		
id ID number		Refer to “10. ID NUMBER AND GLP REPORT”		
AP Fnc Application	APF Application function	▪ 0	Normal weighing mode	
		1	Capacity indicator	
		2	Statistical calculation mode	
	StAF Statistical function mode output items	▪ 0	Number of data, sum	
		1	Number of data, sum, maximum, minimum, average, range (maximum-minimum)	
		2	Number of data, sum, maximum, minimum, average, range (maximum-minimum), standard deviation, coefficient of variation	
		3	Number of data, sum, maximum, minimum, average, range (maximum-minimum), standard deviation, coefficient of variation, relative error	
CS in 1* Internal mass value correction: Method 1		Refer to “7. CALIBRATION”		Displayed only when the function switch (internal mass value correction switch) is set to 1.
CS in 2 * Internal mass value correction: Method 2				

▪ : Factory settings * : Only for the FZ-*i* WP series

Caution

The balance may not transmit the data completely at the specified refresh rate, depending on the baud rate. When a refresh rate of 20 times/second is used, set the baud rate to 4800 bps or higher.

9-4 Description of the Class “Environment, Display”

Condition (Cond)

Cond 0 This parameter is for sensitive response to the fluctuation of a weight value. Used for powder target weighing, weighing a very light sample or when quick response weighing is required.
After setting, the balance displays FAST.

Cond 2 This parameter is for stable weighing with slow response. Used to prevent a weight value from drifting due to vibration or drafts.
After setting, the balance displays SLOW.

Note
With “Hold function (HoLd)” set to “ON (1)”, this item is used to set the averaging time.

Stability band width (St-b)

This item controls the width to regard a weight value as a stable value. When the fluctuation per second is less than the parameter, the balance displays the stabilization indicator and outputs the data. The parameter influences the “Auto print mode”

St-b 0 This parameter is for sensitive response of the stabilization indicator. Used for exact weighing.

St-b 2 This parameter ignores slight fluctuation of a weight value. Used to prevent a weight value from drifting due to vibration or drafts.

Note
With “Hold function (HoLd)” set to “ON (1)”, this item is used to set the stabilization range.

Hold function (HoLd) (Animal weighing mode)

This function is used to weigh a moving object such as an animal.
When the weight data is over the weighing range from zero and the display fluctuation is within the stabilization range for a fixed period of averaging time, the processing indicator illuminates and the balance displays the average weight of the animal. When the animal is removed from the weighing pan, the display returns to zero automatically.
This function is available only when the hold function parameter is set to “ 1” (the animal mode indicator ANIMAL illuminates) and any weighing unit other than the counting mode is selected.

The stabilization range and averaging time are set in “Condition (Cond)” and “Stability band width (St-b)”.

Weighing range	
FZ-120 *i* WP FZ-200 *i* WP FZ-300 *i* WP FX-120 *i* WP FX-200 *i* WP FX-300 *i* WP	0.200 g or over
FZ-1200 *i* WP FZ-2000 *i* WP FZ-3000 *i* WP FX-1200 *i* WP FX-2000 *i* WP FX-3000 *i* WP	2.00 g or over

Averaging time			Stabilization range		
Cond 0	2 seconds	Faster	St-b 0	6.25%	Lesser
Cond 1	4 seconds	↕	St-b 1	12.5%	↕
Cond 2	8 seconds	More accurate	St-b 2	16.7%	Greater

Zero tracking (trc)

This function tracks zero point drift caused by changes in the environment and stabilizes the zero point. When the weight data is only a few digits, turn the function off for accurate weighing.

Note

Digit, when used for the FX-*i* WP series balance, indicates a unit of minimum weighing value.

trc 0	The tracking function is not used. Used for weighing a very light sample.
trc 1	The tracking function is used. Normal zero tracking.
trc 2	The tracking function is used. Strong zero tracking.
trc 3	The tracking function is used. Very strong zero tracking.

Display refresh rate (SPd)

Period to refresh the display. This parameter influences “Stream mode” along with “Baud rate” and “Data output pause”

Note

This item is selected automatically when the response rate is changed.

Decimal point (Pnt)

The decimal point format can be selected.

Auto display-ON (P-on)

When the AC adapter is connected, the display is automatically turned on in the weighing mode, without the ON:OFF key operation. Used when the balance is built into an automated system. 30-minute warm up is necessary for accurate weighing.

Auto display-OFF (PoFF)

When the AC adapter is connected and no operation is performed (inactivity state) for 10 minutes, the display is automatically turned off and the standby indicator is illuminated.

9-5 Description of the Item “Data Output Mode”

The parameter setting of the “Data output mode (Prt)” applies to the performance when the data is transmitted using the RS-232C serial interface.

Key mode

When the PRINT key is pressed with the stabilization indictor turned on, the balance outputs the weight data and the display blinks one time.

Required setting	dout	Prt 0	Key mode

Auto print modes A and B

When the displayed value is stable and the conditions of “Auto print polarity”, “Auto print difference” and reference value are met, the balance outputs the weight data.

When the PRINT key is pressed with the stabilization indictor turned on, the balance outputs the data and the display blinks one time.

Mode A:	Required setting	dout	Prt 1	Auto print mode A (reference = zero)
		dout	AP-P	Auto print polarity
		dout	AP-b	Auto print difference
	Example	“For outputting the weight value each time a sample is added, with “Ar-d” set to “ 1” (to adjust zero after the data is output).”		

Mode B:	Required setting	dout	Prt 2	Auto print mode B (reference = last stable value)
		dout	AP-P	Auto print polarity
		dout	AP-b	Auto print difference
	Example	“For outputting the weight value while a sample is added.”		

Stream mode

The balance outputs the weight data continuously regardless of the display condition. The display does not blink in this mode.

Required setting	dout	Prt 3	Stream mode
	bASFnc	SPd	Display refresh rate
	S iF	bPS	Baud rate
Example	“For monitoring data on a computer”		

Caution

The balance may not transmit the data completely at the specified refresh rate and baud rate. Set the baud rate higher.

Key mode B

When the PRINT key is pressed, the balance outputs the weight data, regardless of the display condition. The display does not blink in this mode.

Required setting	dout	Prt 4	Key mode B (Immediately)

Key mode C

When the PRINT key is pressed with the stabilization indictor turned on, the balance outputs the weight data. When the stabilization indicator is not on, the balance waits for the indicator to turn on and outputs the data. The balance blinks one time in this mode.

Required setting	dout	Prt 5	Key mode C (when stable)

Interval output mode

The weight data is periodically output.

When the [PRINT] key is pressed, the balance starts to output the weight data at a preset interval time.

When the [PRINT] key is pressed again, the balance stops outputting the weight data.

Required setting	dout	Prt 6	Interval output mode
	dout	int	Interval time
Example	"For outputting the weight data periodically."		

Caution

The balance may not transmit the data completely at the specified interval times and baud rate. Set the baud rate higher.

9-6 Description of the Item "Data Format"

A&D standard format SiF type 0

This format is used when the peripheral equipment can receive the A&D format. If an AD-8121B printer is used, set the printer to MODE 1 or 2.

- This format consists of fifteen characters excluding the terminator.
- A header of two characters indicates the balance condition.
- The polarity sign is placed before the data with the leading zeros. If the data is zero, the plus sign is used.
- The unit, consisting of three characters, follows the data.
- Output example: S T , + 0 0 0 1 2 . 7 8 ␣ ␣ g CR LF

  Header: S T, Data: + 0 0 0 1 2 . 7 8, Unit: ␣ ␣ g, Terminator: CR LF

  - S T Stable header
  - U S Unstable header
  - O L Overload header
  - Q T Stable header (Counting mode)

- Print example: W T ␣ ␣ ␣ ␣ ␣ + 1 2 . 7 8 ␣ ␣ g CR LF

  Header: W T, Data: ␣ ␣ ␣ ␣ ␣ + 1 2 . 7 8, Unit: ␣ ␣ g, Terminator: CR LF

  - W T Header for modes other than the counting mode
  - Q T Header for the counting mode

DP (Dump print) format SiF type 1

This format is suitable for the peripheral equipment that prints the received data as is.

When an AD-8121B printer is used, set the printer to MODE 3.

- This format consists of sixteen characters excluding the terminator.
- A header of two characters indicates the balance condition. No overload header is used.
- The polarity sign is placed before the data, with spaces in place of leading zeros, if the data is not zero or overloaded.
- The unit, consisting of three characters, follows the data.

W T ␣ ␣ ␣ ␣ ␣ + 1 2 . 7 8 ␣ ␣ g CR LF

Header: W T, Data: ␣ ␣ ␣ ␣ ␣ + 1 2 . 7 8, Unit: ␣ ␣ g, Terminator: CR LF

- W T Stable header
- U S Unstable header
- Q T Stable header (Counting mode)

KF format SIF TYPE 2

This is the Karl-Fischer moisture meter format and is used when the peripheral equipment can only communicate using this format.

- This format consists of fourteen characters excluding the terminator.
- This format has no header characters.
- The polarity sign is placed before the data, with spaces in place of leading zeros, if the data is not zero or overloaded.
- This format outputs the unit only for a stable value.

+	␣	␣	␣	␣	1	2	.	7	8	␣	g	␣	␣	CR	LF

Data Unit Terminator

␣	g	␣	␣	Stable value
␣	␣	␣	␣	Unstable value

MT format SIF TYPE 3

This format is used when the peripheral equipment of other manufacturer is connected. Please note that the connection is not guaranteed.

- A header of two characters indicates the balance condition.
- The polarity sign is used only for negative data.
- The weight data uses spaces in place of the leading zeros.
- The character length of this format changes dependent upon the unit

S	␣	␣	␣	␣	␣	␣	1	2	.	7	8	␣	g	CR	LF

Header Data Unit Terminator

S	␣	Stable header
S	D	Unstable header
S	I	Overload header

NU (numerical) format SIF TYPE 4

This format outputs only numerical data.

- This format consists of nine characters excluding the terminator.
- The polarity sign is placed before the data with the leading zeros. If the data is zero, the plus sign is used.

+	0	0	0	1	2	.	7	8	CR	LF

Data Terminator

CSV format SIF TYPE 5

- Separates the data of A&D standard format and the unit by a comma (,).
- Outputs the unit even when the data is overloaded.

ST,+00012.78, ␣ ␣ g<CR><LF>

Weight data

S	T	,	+	0	0	0	1	2	.	7	8	,	␣	␣	g	CR	LF

O	L	,	+	9	9	9	9	9	9	9	E	+	1	9	,	␣	␣	g	CR	LF

9-7 Data Format Examples

Stable

1.27 g

A&D	S	T	,	+	0	0	0	0	1	.	2	7	␣	␣	g	CR	LF
DP	W	T	␣	␣	␣	␣	␣	␣	+	1	.	2	7	␣	␣	g	CR	LF
KF	+	␣	␣	␣	␣	␣	1	.	2	7	␣	g	␣	␣	CR	LF	
MT	␣	␣	␣	␣	␣	␣	␣	␣	1	.	2	7	␣	g	CR	LF	
NU	+	0	0	0	0	1	.	2	7	CR	LF						

Unstable

-183.69 g

A&D	U	S	,	-	0	0	1	8	3	.	6	9	␣	␣	g	CR	LF
DP	U	S	␣	␣	␣	␣	-	1	8	3	.	6	9	␣	␣	g	CR	LF
KF	-	␣	␣	␣	1	8	3	.	6	9	␣	␣	␣	␣	CR	LF	
MT	S	D	␣	␣	␣	-	1	8	3	.	6	9	␣	g	CR	LF	
NU	-	0	0	1	8	3	.	6	9	CR	LF						

Overload
Positive error

E g

A&D	O	L	,	+	9	9	9	9	9	9	9	E	+	1	9	CR	LF
DP	␣	␣	␣	␣	␣	␣	␣	␣		␣	␣	␣	␣	␣	␣	␣	CR	LF
KF	␣	␣	␣	␣	␣	␣	H	␣	␣	␣	␣	␣	␣	␣	CR	LF	
MT	S	I	+	CR	LF												
NU	+	9	9	9	9	9	9	9	9	CR	LF						

Overload
Negative error

-E g

A&D	O	L	,	-	9	9	9	9	9	9	9	E	+	1	9	CR	LF
DP	␣	␣	␣	␣	␣	␣	␣	-	E	␣	␣	␣	␣	␣	␣	␣	CR	LF
KF	␣	␣	␣	␣	␣	␣	L	␣	␣	␣	␣	␣	␣	␣	CR	LF	
MT	S	I	-	CR	LF												
NU	-	9	9	9	9	9	9	9	9	CR	LF						

␣ Space, ASCII 20h
CR Carriage Return, ASCII 0Dh
LF Line Feed, ASCII 0Ah

Units

		A&D	D.P.	KF	MT
g	g	␣␣g	␣␣g	␣g␣␣	␣g
Counting mode	pcs	␣PC	␣PC	␣pcs	␣PCS
Precent mode	%	␣␣%	␣␣%	␣%␣␣	␣%
Ounce (Avoir)	oz	␣oz	␣oz	␣oz␣	␣oz
Pound	lb	␣lb	␣lb	␣lb␣	␣lb
Pound Ounce	⌊oz	␣oz	␣oz	␣oz␣	␣oz
Troy Ounce	ozt	ozt	ozt	␣ozt	␣ozt
Metric Carat	ct	␣ct	␣ct	␣ct␣	␣ct
Momme	mom	mom	mom	␣mom	␣mo
Pennyweight	dwt	dwt	dwt	␣dwt	␣dwt
Grain	GN	␣GN	␣GN	␣gr␣	␣GN
Tael (HK general, Singapore)	tl	␣tl	␣tl	␣tls	␣tl
Tael (HK, jewelry)	tl	␣tl	␣tl	␣tlh	␣tl
Tael (Taiwan)	tl	␣tl	␣tl	␣tlt	␣tl
Tael (China)	tl	␣tl	␣tl	␣tlc	␣tl
Tola (India)	tol	␣␣t	␣␣t	␣tol	␣t
Messghal	mes	mes	mes	␣MS␣	␣m
Multi	MLT	MLT	MLT	␣MLT	␣MLT

␣ Space, ASCII 20h

Note
When "Pound Ounce" is selected, the data is output with the unit of ounce (oz).

9-8 Description of the Item "Application Function"

Capacity indicator (APF 1)

In the weighing mode, the indicator displays the weight data relative to the weighing capacity in percentage. (Zero = 0%, maximum capacity = 100%)

Statistical calculation mode (APF 2)

The mode statistically calculates the weight data, and displays or outputs the results. For details, refer to "5-4 Statistical Calculation Mode".

9-9 Comparator Function

The results of the comparison are indicated by HI OK LO on the display.

Operating conditions:
- No comparison
- Comparison when the weight data is stable or overloaded, excluding “near zero”
- Comparison when the weight data is stable or overloaded, including “near zero”
- Continuous comparison, excluding “near zero”
- Continuous comparison, including “near zero”

To compare, use:
- Upper limit value and lower limit value

Input method:
- Digital input

Note

"Near zero" means that the weight value is within ±10 digits of the minimum weighing value.
For example, using a FX-3000*i* WP in gram mode, the range of ±0.10 g is “near zero”.

For the description of “Comparator (CP Fnc)”, refer to “9-3 Details of the Function Table”.

Setting example

(Continuous comparison, excluding “near zero”, upper limit and lower limit values, digital input)

Selecting a comparator mode

1 Press and hold the SAMPLE key until bASFnc of the function table is displayed.

2 Press the SAMPLE key several times to display CP Fnc.

3 Press the PRINT key.

4 Press the RE-ZERO key several times to display CP 3.

5 Press the PRINT key to store the selected mode.

Entering the upper limit value

6 With CP Hi displayed, press the PRINT key. The current setting of the upper limit value is displayed with all the digits blinking.
- When the current setting is not to be changed, press the PRINT or CAL key to proceed to step 7.
- When the current setting is to be changed, press the RE-ZERO key. Change the setting using the following keys.

SAMPLE key	To select the digit to change the value.
RE-ZERO key	To change the value of the digit selected.
MODE key	To switch the polarity.
PRINT key	To store the new setting and go to step 7.
CAL key	To cancel the new setting and go to step 7.

Entering the lower limit value

7 With CP Lo displayed, press the PRINT key. The current setting of the lower limit value is displayed with all the digits blinking.
- When the current setting is not to be changed, press the PRINT or CAL key to proceed to step 8.
- When the current setting is to be changed, press the RE-ZERO key. Change the setting using the following keys.

SAMPLE key	To select the digit to change the value.
RE-ZERO key	To change the value of the digit selected.
MODE key	To switch the polarity.
PRINT key	To store the new setting and go to step 8.
CAL key	To cancel the new setting and go to step 8.

8 Press the CAL key to exit the comparator function and return to the weighing mode.

9-10 Clock and Calendar Function (Only for the FZ-*i* WP series)

The FZ-*i* WP series balance is equipped with a clock and calendar function. When the "GLP output (InFo)" parameter is set to "1" or "2" and the "Time/Date output (S-td)" parameter is set to "1", "2" or "3", the time and date are added to the output data. Set or confirm the time and date as follows:

Operation

1 Press and hold the SAMPLE key until bASFnc of the function table is displayed.
2 Press the SAMPLE key several times to display CL Add.
3 Press the PRINT key. The balance enters the mode to confirm or set the time and date.

Confirming the date

4 The current date is displayed with all the digits blinking.
- When the date is correct and the operation is to be finished, press the CAL key and proceed to step 8.
- When the time is to be confirmed again, press the SAMPLE key and go back to step 4.
- When the date is not correct and is to be changed, press the RE-ZERO key and proceed to step 7.

Note

The year is expressed using a two-digit format. For example, the year 2000 is expressed as "00".

Setting the date (with part of the digits blinking)

5 Set the Year, Month and Date using the following keys.

SAMPLE key	To select the digits to change the value. The selected digits blink.
RE-ZERO key	To increase the value by one.
MODE key	To decrease the value by one.
PRINT key	To store the new setting, display End and go to step 6.
CAL key	To cancel the new setting and go to step 6.

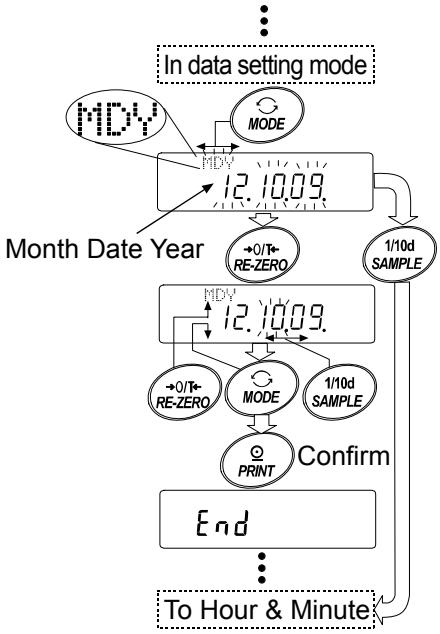

Confirming the time

6 The current time is displayed with all the digits blinking.
- When the time is correct and the date does not need to be confirmed, press the CAL key and proceed to step 8.
- When the time is correct and the date is to be confirmed, press the SAMPLE key and proceed to step 4.
- When the time is not correct and is to be changed, press the RE-ZERO key and proceed to step 7.

Setting the time (with part of the digits blinking)

7 Set the Hour and Minute in 24-hour format using the following keys.

SAMPLE key	To select the digits to change the value. The selected digits blink.
RE-ZERO key	To increase the value by one.
MODE key	To decrease the value by one.
PRINT key	To store the new setting, display End and go to step 8.
CAL key	To cancel the new setting and go to step 8.

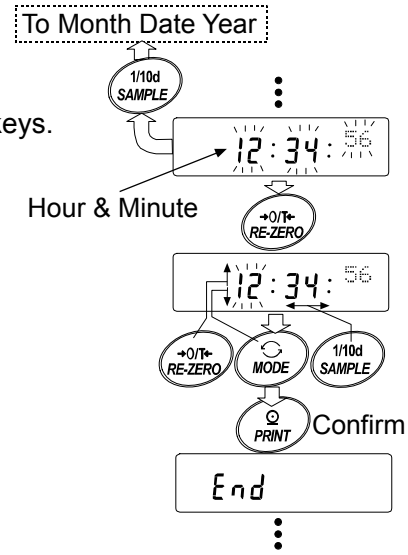

Quitting the operation

8 The balance displays the next menu of the function table. Press the [CAL] key to exit the clock and calendar function and return to the weighing mode.

Notes

- **Do not enter invalid values such as a non-existing date when setting the time and date.**
- **When the clock backup battery has been depleted, the balance displays [rtc PF]. Under this condition, press any key and set the time and date. The dead battery only affects the clock and calendar function. Even so, the function works normally as long as the AC adapter is connected to the balance.**

10. ID NUMBER AND GLP REPORT

- The ID number is used to identify the balance when Good Laboratory Practice (GLP) or Good Manufacturing Practice (GMP) is used.
- The ID number is maintained in non-volatile memory even if the AC adapter is removed.
- The output format for GLP/GMP compliant report is selected at “GLP output (inFo)” of the function table and can be output to a personal computer or printer using the RS-232C serial interface.
- The GLP/GMP compliant report includes the balance manufacturer, model, serial number, ID number and space for signature for weight data, and the weight used and results for calibration or calibration test data.
  When the AD-8121B printer is used, the date and time can be printed using the AD-8121B clock and calendar function. In this case, set the “GLP output (inFo)” parameter to “ 1”.
- The balance can output the following:
  “Calibration report” of the calibration, using the internal mass (Calibration due to changes in temperature and one-touch calibration.)
  “Calibration report” of the calibration, using an external weight.
  “Calibration test report” of the calibration test, using an external weight.
  “Title block” and “End block” for the weight data.

10-1 Setting the ID Number

1 Press and hold the [SAMPLE] key until [bASFnc] of the function table is displayed.

2 Press the [SAMPLE] key several times to display [id].

3 Press the [PRINT] key. Set the ID number using the following keys.

[SAMPLE] key	To select the digit to change the value.
[RE-ZERO] key, [MODE] key	To set the character of the digit selected. Refer to the display character set shown below.
[PRINT] key	To store the new ID number and display [AP Fnc]
[CAL] key	To cancel the new ID number and display [AP Fnc]

4 Press the [CAL] key to return to the weighing mode.

Display character set

0	1	2	3	4	5	6	7	8	9	-	␣	A	B	C	D	E	F	G	H	I	J	K	L	M	N	O	P	Q	R	S	T	U	V	W	X	Y	Z
0	1	2	3	4	5	6	7	8	9	-		A	b	C	d	E	F	G	H	I	J	K	L	M	n	o	P	q	r	S	t	U	v	W	X	Y	Z

← [MODE] key ␣ Space [RE-ZERO] key →

10-2 GLP Report

Set the following parameters to output the GLP/GMP compliant report.

- To print the report, set the “GLP output (inFo)” parameter to “ 1” and use MODE 3 of the AD-8121B.
  For details on using the printer, refer to “14-1 Connection to the AD-8121B Printer”.
  If the time and date are not correct, adjust the AD-8121B clock and calendar.
- To output the report to a personal computer using the RS-232C serial interface, set the “GLP output (inFo)” parameter to “2”.

Note

For operational details about calibration and calibration test, refer to “7. CALIBRATION”.

Calibration report using an internal mass (Only for the FZ-*i* WP series)

When the setting is " InFo 1":

AD-8121 format

```
              A & D
MODEL     FZ-3000i
S/N       01234567
ID          ABCDEFG
DATE    2006/02/06
TIME      12:23:34
CALIBRATED(EXT.)
REMARKS


SIGNATURE


- - - - - - - - - - - -.
```

When the setting is " InFo 2":

General data format

```
␣␣␣␣␣␣␣␣␣␣␣A␣&␣D<TERM>
MODEL␣␣␣FZ-3000i<TERM>
S/N␣␣␣␣␣01234567<TERM>
ID␣␣␣␣␣␣␣ABCDEFG<TERM>
DATE<TERM>
␣␣␣␣␣␣2006/02/06<TERM>
TIME<TERM>
␣␣␣␣␣␣␣␣12:23:34<TERM>
CALIBRATED(EXT.)<TERM>
REMARKS<TERM>
<TERM>
<TERM>
SIGNATURE<TERM>
<TERM>
<TERM>
----------------<TERM>
<TERM>
<TERM>
```

Manufacturer
Model
Serial number
ID number
Date
Time
Calibration type
Remarks
Signature

␣ Space, ASCII 20h
<TERM> Terminator, C_R, L_F or C_R
C_R Carriage return, ASCII 0Dh
L_F Line feed, ASCII 0Ah

Calibration report using an external weight

When the setting is " InFo 1":

AD-8121 format

```
              A & D
MODEL     FX-3000i
S/N       01234567
ID          ABCDEFG
DATE    2006/02/06
TIME      12:23:34
CALIBRATED(EXT.)
CAL.WEIGHT
        +2000.00 g
REMARKS


SIGNATURE


- - - - - - - - - - - -.
```

When the setting is " InFo 2":

General data format

```
␣␣␣␣␣␣␣␣␣␣␣A␣&␣D<TERM>
MODEL␣␣␣FX-3000i<TERM>
S/N␣␣␣␣␣01234567<TERM>
ID␣␣␣␣␣␣␣ABCDEFG<TERM>
DATE<TERM>
<TERM>                    *
TIME<TERM>
<TERM>                    *
CALIBRATED(EXT.)<TERM>
CAL.WEIGHT<TERM>
␣␣␣␣␣+2000.00␣␣g<TERM>
REMARKS<TERM>
<TERM>
<TERM>
SIGNATURE<TERM>
<TERM>
<TERM>
----------------<TERM>
<TERM>
<TERM>
```

Manufacturer
Model
Serial number
ID number
Date
Time
Calibration type
Calibration weight
Remarks
Signature

␣ Space, ASCII 20h
<TERM> Terminator, C_R, L_F or C_R
C_R Carriage return, ASCII 0Dh
L_F Line feed, ASCII 0Ah

* With FZ-*i* WP series, the time and date are added to output

Calibration test report using an external weight

(Calibration test does not perform calibration.)

When the setting is “ inFo 1”:

AD-8121 format

```
                A & D
MODEL       FX-3000i
S/N         01234567
ID           ABCDEFG
DATE      2006/02/06
TIME        12:23:34
CAL.TEST(EXT.)
ACTUAL
              0.00 g
          +1999.99 g
TARGET
          +2000.00 g
REMARKS


SIGNATURE
```

When the setting is “ inFo 2”:

General data format

```
␣␣␣␣␣␣␣␣␣␣␣A␣&␣D<TERM>
MODEL␣␣␣FX-3000i<TERM>
S/N␣␣␣␣␣01234567<TERM>
ID␣␣␣␣␣␣␣ABCDEFG<TERM>
DATE<TERM>
<TERM>                    *
TIME<TERM>
<TERM>                    *
CAL.TEST(EXT.)<TERM>
ACTUAL<TERM>
␣␣␣␣␣␣␣␣␣0.00␣␣g<TERM>
␣␣␣␣␣+1999.99␣␣g<TERM>
TARGET<TERM>
␣␣␣␣␣+2000.00␣␣g<TERM>
REMARKS<TERM>
<TERM>
<TERM>
SIGNATURE<TERM>
<TERM>
<TERM>
----------------<TERM>
<TERM>
<TERM>
```

Manufacturer
Model
Serial number
ID number
Date
Time
Calibration test type
Zero point value
Target weight value
Target weight
Remarks
Signature

␣ Space, ASCII 20h
<TERM> Terminator, C_R, L_F or C_R
C_R Carriage return, ASCII 0Dh
L_F Line feed, ASCII 0Ah

* With FZ-*i* WP series, the time and date are added to output

Title block and end block

When a weight value is recorded as the GLP data, “Title block” and “End block” are inserted at the beginning and at the end of a group of weight values, in the GLP report.

Note

To output the report to an AD-8121B , use MODE 3 of the AD-8121B.

Operation

1 With the weight data displayed, press and hold the PRINT key until StArt is displayed. The “Title block” is output.

2 The weight data is output according to the parameter setting of the data output mode.

3 Press and hold the PRINT key until rEcEnd is displayed. The “End block” is output.

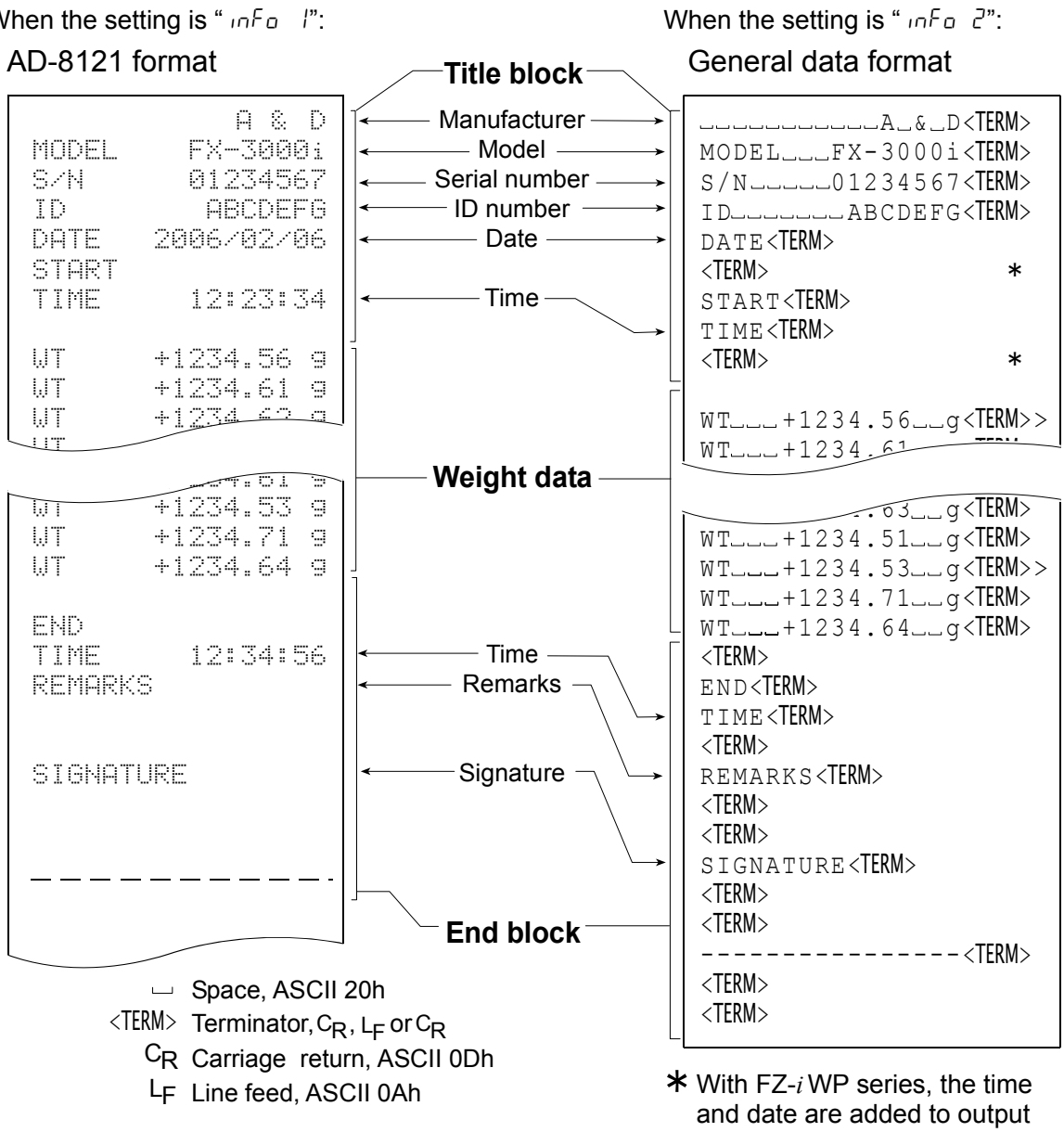

11. UNDERHOOK

The underhook can be used for magnetic materials or density measurement. The built-in underhook is revealed by removing the plastic cap on the bottom of the balance.
Use the underhook as shown below.

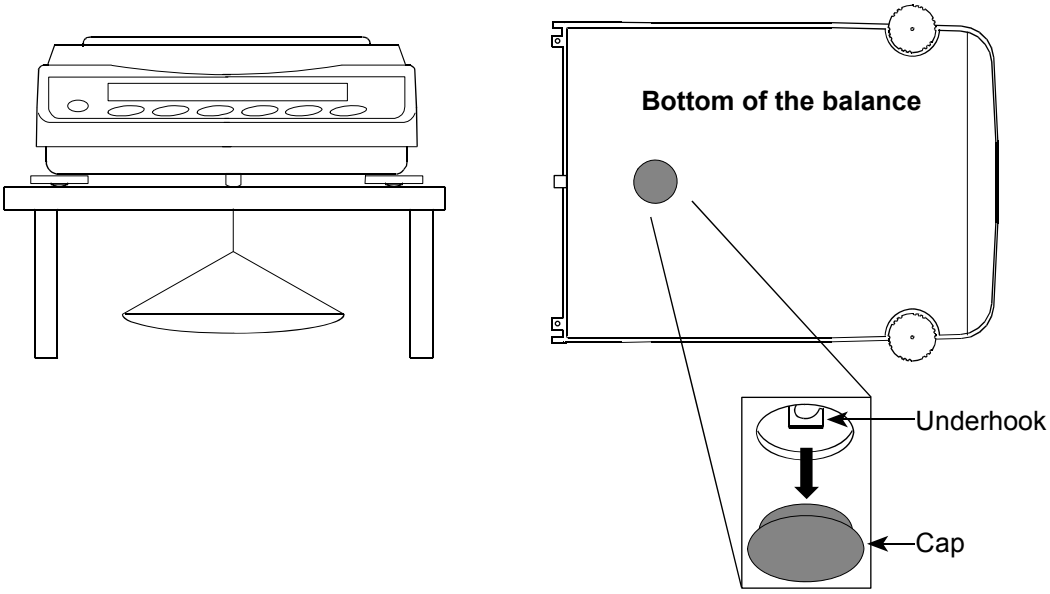

Caution

- **Do not apply excessive force to the underhook.**
- **When the underhook is not in use, attach the plastic cap to prevent dust from getting into the balance.**
  The cap was sealed to the bottom of the balance using a special adhesives to be dust-tight and protected against water jets. The balance does not comply with IP65 once the cap has been removed.

12. PROGRAMMABLE-UNIT

This is a programmable unit conversion function. It multiplies the weight data in grams by an arbitrary coefficient set in the function table and displays the result.

The coefficient must be within the range between the minimum and maximum shown below. If the coefficient set is beyond the range, an error is displayed and the balance returns to the coefficient setting mode, prompting to enter an appropriate value. A coefficient of 1 was set at the factory.

Model			Minimum coefficient	Maximum coefficient
FZ-120*i* WP FX-120*i* WP	FZ-200*i* WP FX-200*i* WP	FZ-300*i* WP FX-300*i* WP	0.000001	1000
FZ-1200*i* WP FX-1200*i* WP	FZ-2000*i* WP FX-2000*i* WP	FZ-3000*i* WP FX-3000*i* WP		100

Operation

1 Press and hold the SAMPLE key until bASFnc of the function table is displayed.

2 Press the SAMPLE key several times to display nLt.

3 Press the PRINT key. The balance enters the mode to confirm or set the coefficient.

Confirming the coefficient

4 The current coefficient is displayed with the first digit blinking.

- When it is not to be changed, press the CAL key and proceed to step 6.
- When it is to be changed, press the RE-ZERO key and proceed to step 5.

Setting the coefficient

5 Set the coefficient using the following keys.

SAMPLE key — To select a digit to change the value. The selected digit blinks.

RE-ZERO key — To change the value.

MODE key — To change the decimal point position. Each time the switch is pressed, the decimal point position changes as follows:

→0.000001 → 00.00001 →...→ 000000.1 → 0000001 →

PRINT key — To store the new setting, display End and go to step 6.

CAL key — To cancel the new setting and go to step 6.

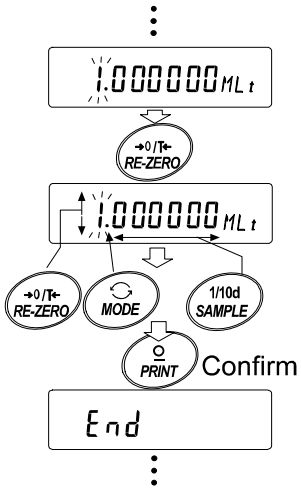

Quitting the operation

6 The balance displays Unit. Press the CAL key to exit the programmable-unit function and return to the weighing mode.

Using the function

Press the MODE key to select the programmable-unit (no display on the unit section). Perform weighing as described in “5-1 Basic Operation (Gram Mode)”. After weighing, the balance displays the result (weight data in grams x coefficient).

13. RS-232C SERIAL INTERFACE

The balance is a Data Communication Equipment (DCE) device. Connect the balance to a personal computer (DTE) using a straight through cable.

Transmission system : EIA RS-232C (D-Sub 9-pin, female connector)
Transmission form : Asynchronous, bi-directional, half duplex
Transmission rate : 20 times/second, 10 times/second or 5 times/second (same as data refresh rate)
Data format : Baud rate : 600, 1200, 2400, 4800, 9600, 19200 bps
Data bits : 7 or 8 bits
Parity : Even, Odd (Data bits 7 bits)
None (Data bits 8 bits)
Stop bit : 1 bit
Code : ASCII

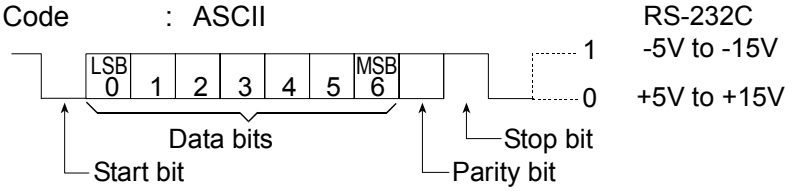

D-Sub 9-pin assignments

Pin No.	Signal name	Direction	Description
1	–	–	No connection
2	TXD	Output	Transmit data
3	RXD	Input	Receive data
4	–	–	No connection
5	SG	–	Signal ground
6	DSR	Output	Data set ready
7	RTS	Input	Request to send
8	CTS	Output	Clear to send
9	–	–	No connection

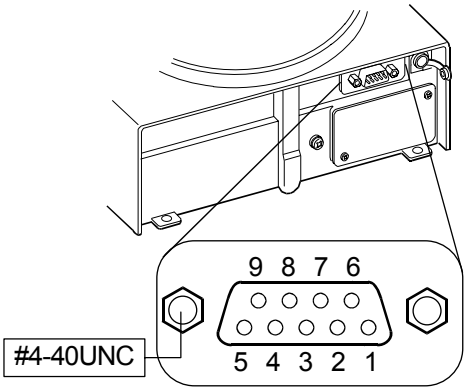

Signal names of the balance side are the same as the DTE side with TXD and RXD reversed.

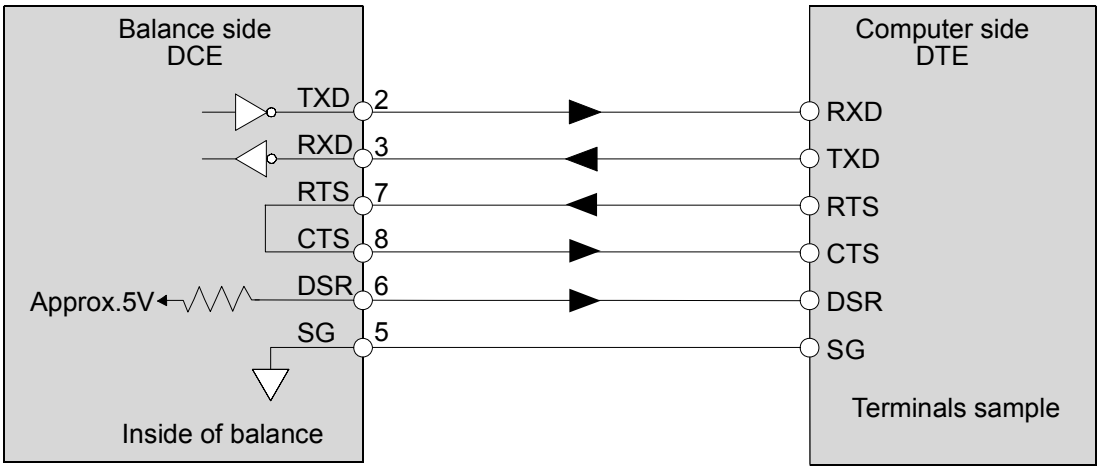

14. CONNECTION TO PERIPHERAL EQUIPMENT

14-1 Connection to the AD-8121B Printer

Set the following parameters to use the AD-8121B printer.

Example of use	AD-8121B mode setting
To print A&D standard format weight data, using the FX-*i* WP PRINT key or FX-*i* WP auto print mode. (The time and date can be added.)	MODE 1
To print A&D standard format weight data, using the AD-8121B DATA key or AD-8121B built-in timer. (The time and date can be added.) To print, using the AD-8121B chart printing function.	MODE 2
To print the FX-*i* WP statistical data.	MODE 3
To print GLP output.	MODE 3

Class	Item and Parameter	Factory settings	AD-8121B MODE 1	AD-8121B MODE 2	AD-8121B MODE 3
dout Data output	Prt Data output mode	0	0, 1,2,4,5 *1	3	0, 1,2,4,5 *1
	PUSE Data output pause	0	0	0	0, 1 *2
S iF Serial interface	bPS Baud rate	2	2	2	2
	btPr Data bit, parity bit	0	0	0	0
	CrLF Terminator	0	0	0	0
	tYPE Data format	0	0	0	1

*1 Set appropriate parameters for "AP-P (Auto print polarity)" and "AP-b (Auto print difference) " when auto print mode A or B (Prt 1 or 2) is selected.
Set the AD-8121B DIP switch No.3 to ON when unstable data is printed with "Prt 4".

*2 Set 1 when multiple lines are printed in the FX-*i* WP statistical calculation mode.

Notes

Refer to "10-2 GLP Report" for print samples.

Settings of AD-8121B DIP switches

MODE	AD-8121B DIP switch	Description
MODE 1	MODE ON 1 2 3 4	Print at receiving data. Standard mode, statistical calculation mode
MODE 2	MODE ON 1 2 3 4	Print by the AD-8121B DATA key operation or AD-8121B built-in timer. Standard mode, interval mode, chart mode
MODE 3	MODE ON 1 2 3 4	Print at receiving data. Dump print mode

DIP switch No.3 : Handling unstable data

ON Print

OFF Not printed

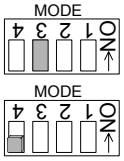

Set the DIP switch No.4 to OFF.

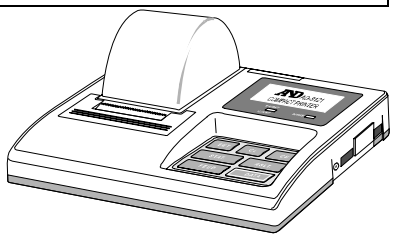

14-2 Connection to a Computer

The FX-*i*WP series balance can be connected to a personal computer using the RS-232C serial interface. As an option, the FX*i*–02 USB interface is available to transmit the balance data to a personal computer.

The FX-*i*WP series balance is a DCE.
Use a straight through cable. If purchasing the RS-232C cable on the market, check the interface connections and type.

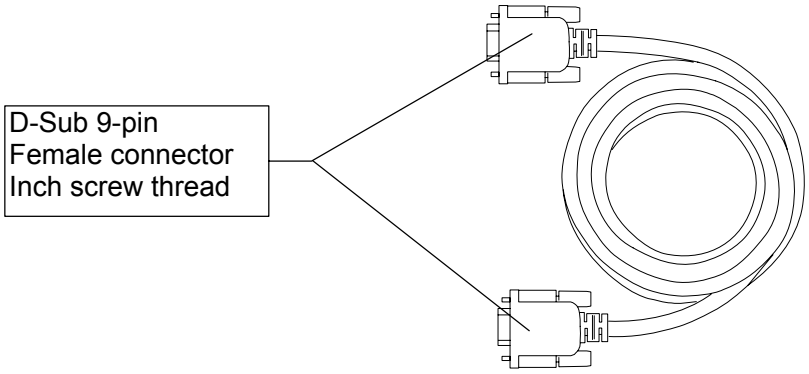

Use the waterproof RS-232C cable (AX-KO2737-500) that is sold separately as an option, when the RS-232C serial interface is used with IP-65. (Refer to page 70)

14-3 Using Windows Communication Tools (WinCT)

When Windows is used as an operating system in a personal computer, the WinCT software, that is downloaded from the A&D website, can be used to transmit the weight data to the personal computer. The WinCT has two communication methods: “RsCom” and “RsKey”.

RsCom

- Can transmit commands to control the balance.
- Can make bi-directional communication between the balance and a personal computer using the RS-232C serial interface.
- Can display or store the data using a text file format. Can also print the data using a printer connected to the personal computer.
- When several ports of a personal computer have balances connected, can communicate with each balance simultaneously.
- Can share a personal computer with other application software.

RsKey

- Can transmit the weight data output from the balance directly to other application software such as Microsoft Excel.
- Can be used with most application software.

Using the WinCT software, the balance can do the following:

1 Analyzing the weight data and the statistics with “RsKey”
The weight data can be input directly into an Excel worksheet. Then, Excel can analyze the data to obtain sum, average, standard deviation, maximum and minimum value, and display them in a graph.

2 Controlling the balance using commands from a personal computer
By using “RsCom”, the personal computer sends commands such as “re-zero” or “send weight data” to the balance and controls the balance.

3 Printing the balance GLP report using your printer
The balance GLP report can be printed using a printer connected to the personal computer.

4 Receiving weight data at a certain interval
The weight data can be received at a certain interval and data characteristic with elapsed time can be obtained.

5 Using a personal computer as an external indicator
With the “RsKey” test mode function, a personal computer can be used as an external weight indicator for the balance. (To do this, set the balance data output mode to stream mode.)

15. COMMANDS

15-1 Command List

Note

A command has a terminator added, that is specified using the "Terminator (CrLF)" parameter of "Serial interface (SIF)" in the function table, and is sent to the balance.

Commands to query weight data

C	Cancels the **S** or **SIR** command.
Q	Requests the weight data immediately.
S	Requests the weight data when stabilized.
SI	Requests the weight data immediately.
SIR	Requests the weight data continuously.
$^{E}_{SC}$P	Requests the weight data when stabilized.

Note: The "Q" and "SI" commands, the "S" and "$^{E}_{SC}$P" commands behave the same.

Commands to control the balance

CAL	Same as the [CAL] key
OFF	Turns the display off.
ON	Turns the display on.
P	Same as the [ON:OFF] key
PRT	Same as the [PRINT] key
R	Same as the [RE-ZERO] key
SMP	Same as the [SAMPLE] key
T	Tare key
Z	Same as the [RE-ZERO] key
$^{E}_{SC}$T	Same as the [RE-ZERO] key
U	Same as the [MODE] key
?ID	Requests the ID number.
?SN	Requests the serial number.
?TN	Requests the model name.
?PT	Requests the tare weight.
PT: ***.*␣␣g**	Changes the tare weight. The unit added is the current weighing unit in A&D standard format.

Note: The "R", "Z" and "$^{E}_{SC}$T" commands behave the same.

$^{E}_{SC}$: ASCII code 1Bh

15-2 Acknowledge Code and Error Codes

When the “AK, Error code (ErCd)” parameter of “Serial interface (SiF)” is set to “ 1”, the balance outputs <AK> code or an error code for each command as follows:

<AK> (06h) Acknowledge in ASCII code.

- When the balance receives a command to request data and can not process it, the balance transmits an error code (EC, Exx).
  When the balance receives a command to request data and can process it, the balance outputs the data.
- When the balance receives a command to control the balance and can not process it, the balance transmits an error code (EC, Exx).
  When the balance receives a command to control the balance and can process it, the balance transmits the acknowledge code.
  Among commands to control the balance, the following transmit the acknowledge code both when the balance receives the command and when the balance has accomplished the command. If the command can not be processed properly, the balance transmits an error code (EC, Exx). This error can be released using the CAL command.

  CAL command (Calibration command) ON command (Display ON command)

  P command (Display ON/OFF command) R command (RE-ZERO command)

R command example

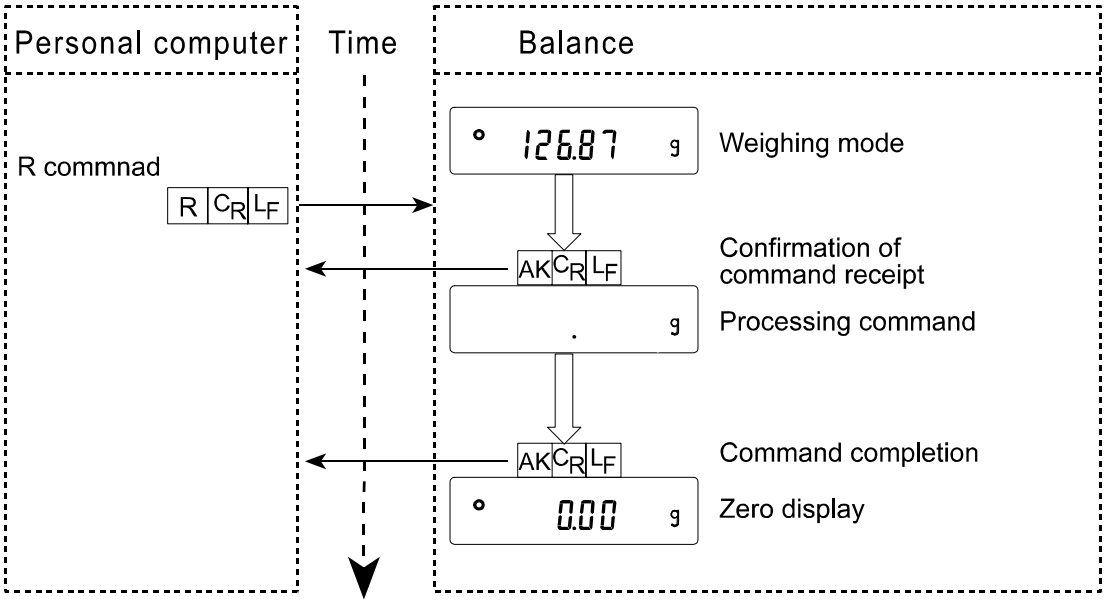

T command example

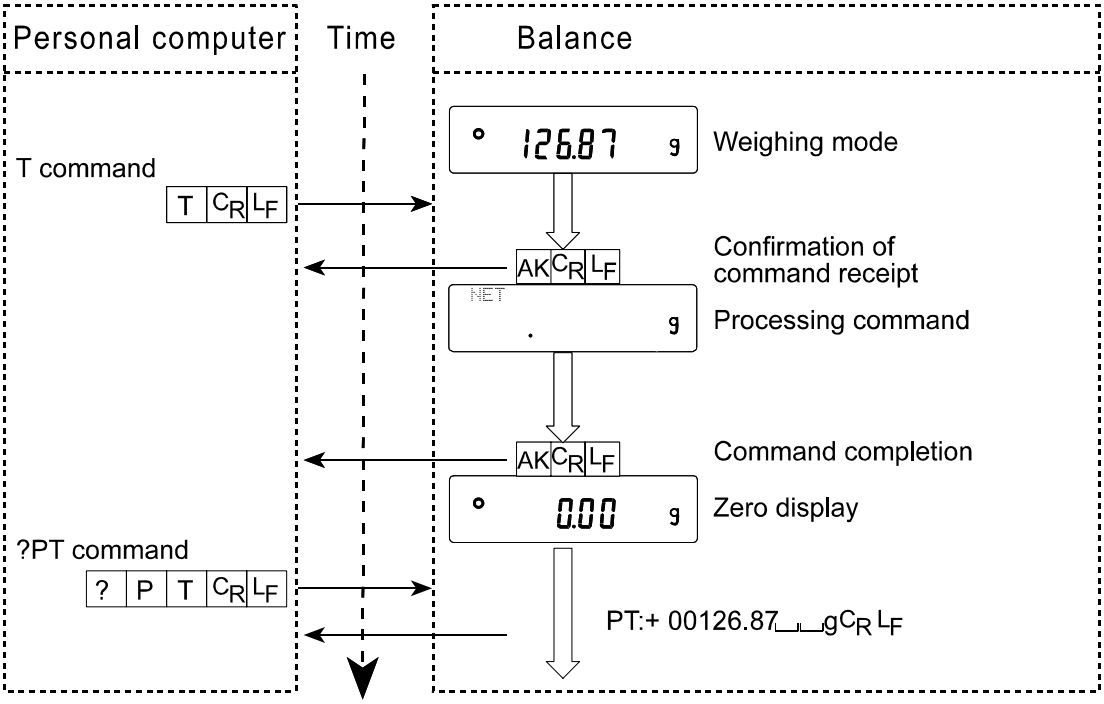

PT command example

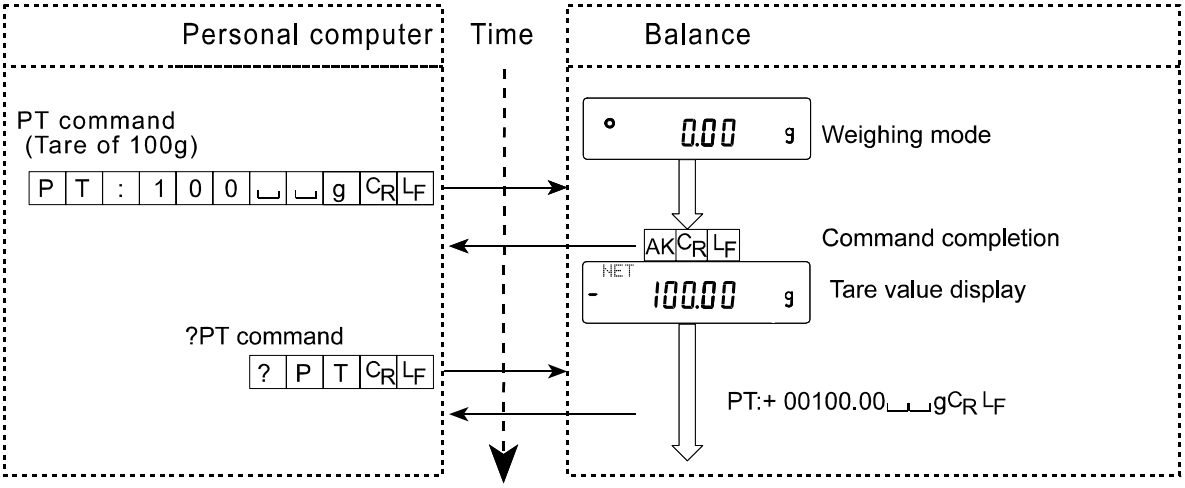

- When a communication error has occurred due to external noise, or a parity error has occurred due to transmission error, the balance transmits an error code. In this case, send the command again.

15-3 Settings Related to the RS-232C

Concerning the RS-232C, the balance has two functions: “Data output (dout)” and “Serial interface (SIF)”. Set each function as necessary.

16. MAINTENANCE

- In normal use, the balance can be cleaned with water. But, keep the following precautions so that dust and water do not invade the balance.
  Do not direct water pressure at the bottom of the balance.
  Do not use powerful water jets.
  Do not immerse the balance in water.
- Do not use organic solvents to clean the balance. Clean the balance with a lint free cloth that is moistened with warm water and a mild detergent.
- Do not disassemble the balance. Contact the local A&D dealer if the balance needs service or repair.
- Use the original packing material for transportation.
- While cleaning the balance and keeping it waterproof, cover the RS-232C interface connector using the terminal cover or connect the waterproof RS-232C cable (AX-KO2737-500), and cover the AC adapter jack. Also, insure that the underhook cap is in place.

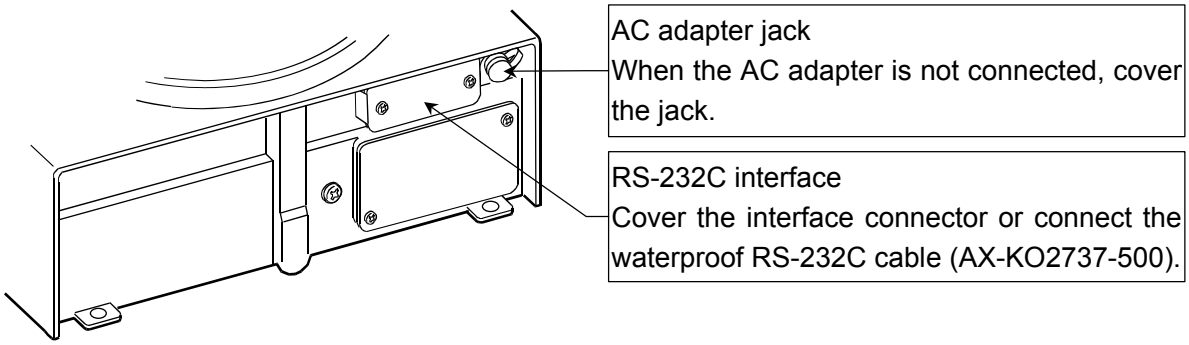

- If water accumulates on the waterproof diaphragm, a weight value may be difficult to become stable. Clean the diaphragm while taking much care not to deform it.

17. TROUBLESHOOTING

17-1 Checking the Balance Performance and Environment

The balance is a precision instrument. When the operating environment or the operating method is inadequate, correct weighing can not be performed. Place a sample on the pan and remove it, and repeat this several times. If the balance seems to have a problem with repeatability or to perform improperly, check as described below. If improper performance persists after checking, contact the local A&D dealer for repair.

Checking that the balance performs properly

- Check the balance repeatability using an external weight. Be sure to place the weight in the center of the weighing pan.
- Check the balance repeatability, linearity and calibrated value using external weights with a known value.

Checking that the operating environment or weighing method is proper

Operating environment

- Is the weighing table solid enough (especially for the FZ-120*i* WP / FZ-200*i* WP / FZ-300*i* WP / FX-120*i* WP / FX-200*i* WP / FX-300*i* WP, the balance with a minimum weighing value of 0.001 g)?
- Is the balance level? Refer to “3-1 Before Use”.
- Is the operating environment free from vibration and drafts? For the FZ-120*i* WP / FZ-200*i* WP / FZ-300*i* WP / FX-120*i* WP / FX-200*i* WP / FX-300*i* WP, has the breeze break been installed?
- Is there a strong electrical or magnetic noise source such as a motor near the balance?

Weighing method

- Is the weighing pan installed correctly?
- Is the waterproof diaphragm deformed? Is the waterproof diaphragm free of foreign materials?
- Is the [RE-ZERO] key pressed before placing a sample on the weighing pan?
- Is the sample placed in the center of the weighing pan?
- Has the balance been calibrated using an external weight?
- Has the balance been warmed up for 30 minutes before weighing?

Sample and container

- Has the sample absorbed or lost moisture due to the ambient conditions such as temperature and humidity?
- Has the temperature of the container been allowed to equalize to the ambient temperature? Refer to “3-2 During Use”.
- Is the sample charged with static electricity? Refer to “3-2 During Use”.
  The FX-120*i*WP / FX-200*i*WP / FX-300*i*WP is prone to be affected by static electricity when the relative humidity is low.
- Is the sample of magnetic material such as iron? Caution is required for weighing magnetic materials. Refer to “3-2 During Use”

17-2 Error Codes

Display	Error code	Description
Error 1	EC, E11	**Stability error** The balance can not stabilize due to an environmental problem. Prevent vibration, drafts, temperature changes, static electricity and magnetic fields. Confirm that the weighing pan is properly installed. Confirm that the waterproof diaphragm is free of foreign materials. Refer to “3. PRECAUTIONS” for details on the operating environment and “6. RESPONSE ADJUSTMENT” about adapting the balance to the environment. To return to the weighing mode, press the CAL key.
Error 2		**Out of range error** The value entered is beyond the settable range. Re-enter the value.
CAL E	EC, E20	**Calibration weight error** The calibration weight is too heavy. Confirm that the weighing pan is properly installed. Confirm the calibration weight value. Press the CAL key to return to the weighing mode.
-CAL E	EC, E21	**Calibration weight error** The calibration weight is too light. Confirm that the weighing pan is properly installed. Confirm the calibration weight value. Press the CAL key to return to the weighing mode.
E		**Overload error** A sample beyond the balance weighing capacity has been placed on the pan. Remove the sample from the pan.
-E		**Weighing pan Error** The weight value is too light. Confirm that the weighing pan and pan support are properly installed. Press the ON:OFF key two times to return to the weighing mode. If the error still persists, calibrate the balance.
Lo		**Sample mass error** The balance can not store the sample for the counting mode or for the percent mode because it is too light. Use a sample that is heavier.
25 - PCS 50 - PCS 100 - PCS		**Unit mass error** The sample unit mass for the counting mode is too light. Storing and using it for counting will cause a counting error. Add samples to reach the specified number and press the PRINT key. Pressing the PRINT key without adding samples will shift the balance to the counting mode. But, to acquire accurate weighing, be sure to add samples.

Display	Error code	Description
	EC, E00	**Communications error** A protocol error occurred in communications. Confirm the format, baud rate and parity.
	EC, E01	**Undefined command error** An undefined command was received. Confirm the command.
	EC, E02	**Not ready** A received command can not be processed. e.g. The balance received a Q command, but not in the weighing mode. e.g. The balance received a Q command while processing a RE-ZERO command. Adjust the delay time to transmit a command.
	EC, E03	**Timeout error** If the timeout parameter is set to "t-UP 1", the balance did not receive the next character of a command within the time limit of one second. Confirm the communication.
	EC, E04	**Excess characters error** The balance received excessive characters in a command. Confirm the command.
	EC, E06	**Format error** A command includes incorrect data. e.g. The data is numerically incorrect. Confirm the command.
	EC, E07	**Parameter setting error** The received data exceeds the range that the balance can accept. Confirm the parameter range of the command.
Other errors		If the errors described above can not be released or other errors are displayed, contact the local A&D dealer.

17-3 Asking For Repair

If the balance needs service or repair, contact the local A&D dealer.

The balance is a precision instrument. Use much care when handling the balance and observe the following when transporting the balance.

- Use the original packing material.
- Remove the weighing pan from the main unit

18. OPTIONS

Notes

The FX*i*-02, FX*i*-08 and FX*i*-09 can not be used at the same time.

The FX-*i* WP series balance does not comply with IP65 when the FX*i*-02, FX*i*-08 or FX*i*-09 and AX-USB-9P-EX is used with the balance.

FX*i*-02 USB interface (Installed in the balance, Applicable OS: Windows 98 OSR2 or later)

- Used to transmit the balance weight data (numerical value only) uni-directionally to a personal computer via USB.
- Can transmit the balance weight data (numerical value only) directly to other application software such as Microsoft Excel, Word and memo pad.
- Driver installation is not necessary.

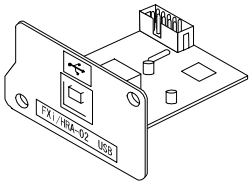

FX *i* –02 Example of use

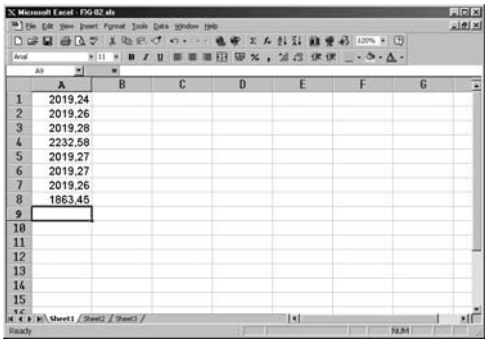

FX*i*-08 Ethernet interface

- Used to connect the balance to a LAN.
- The "WinCT-Plus" data communication software is provided as an accessory and can perform the following.
  - Acquire data from multiple balances connected to a LAN.
  - Control these balances with commands.
  - Acquire data transmitted from balances.
    Example: When pressing the PRINT key of the balance, data is output and is acquired by the computer.
  - The stored data can be used with Microsoft Excel (if installed).

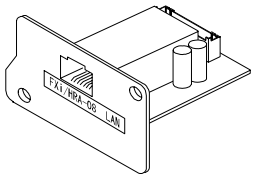

FX *i* –08 Example of use

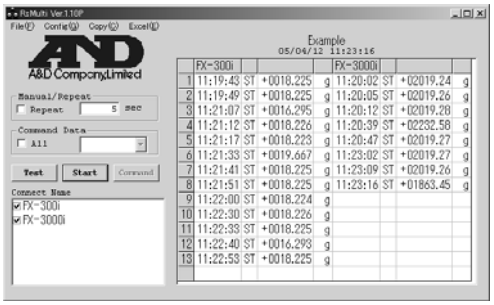

FX*i*-09 Built-in battery unit (Ni-HM rechargeable battery pack)

- Charging time: Approx. 10 hours
- Continuous operation hours: Approx. 8 hours

FX*i*-WP-10 Small breeze break

- Provided for the FZ-*i* WP series and FX-120*i* WP / FX-200*i* WP / FX-300*i* WP as standard.
  Can be used for FX-1200*i* WP / FX-2000*i* WP / FX-3000*i* WP.

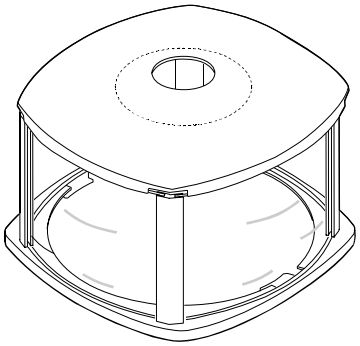

FX*i*-WP-11 Large breeze break

- Breeze break with greater height. Can be used for all models. Convenient when a large beaker or measuring cylinder is used and requires more height.

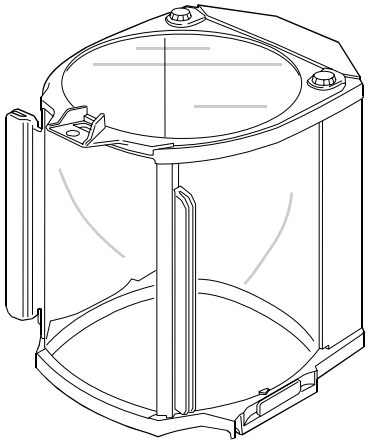

AX-USB-9P-EX USB converter

- Adds a COM port to a PC.
- Enables bi-directional communication between the PC and the balance when a USB driver is installed.
- Can use serial communication software such as WinCT on a PC without COM ports.

AX-KO2737-500 Waterproof RS-232C cable

- Length 5 m, D-Sub 9-pin - D-Sub 9-pin
- Only the 9-pin of the balance side is of waterproof type.

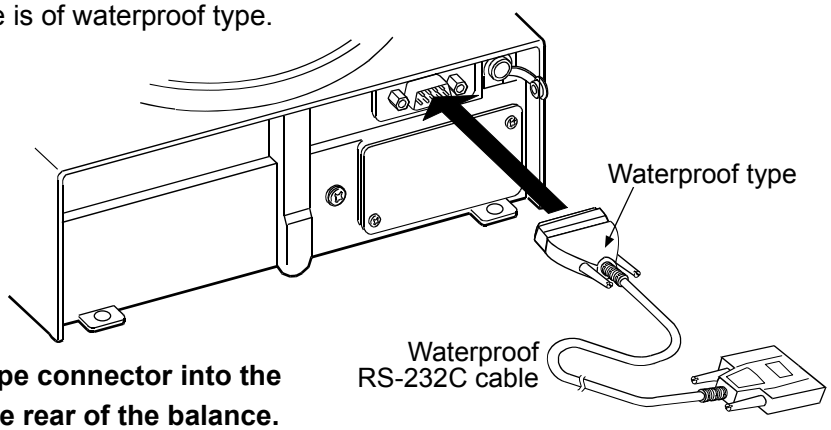

Note

Be sure to insert the waterproof type connector into the RS-232C interface connector on the rear of the balance.

AD-1683 DC static eliminator

- Used to minimize weighing errors due to static electricity on the material. The AD-1683 is direct-current static eliminator. The ions generated produce no breeze and are effective over a long distance. Therefore, the balance can accurately weight powders, etc. by using the AD-1683.

AD-1684 Electrostatic field meter

- This option measures the amount of the static charge on the sample, tare or peripheral equipment and displays the result. If those are found to be charged, discharge them using the AD-1683 DC static eliminator.

AD-1687 Weighing environment logger

- A data logger equipped with 4 sensors for temperature, humidity, barometric pressure and vibration that can measure and store environmental data.
- When connected to the RS-232C interface of the balance, the AD-1687 can store environmental data along with weighing data. Therefore, it is possible to store data in an environment where a computer can not be used.
- The stored data can be read to a personal computer using USB.
  As the AD-1687 is recognized as USB memory, special software is not required to read the data.

AD-1688 Data logger

- When connected to the RS-232C interface of the balance, the AD-1688 can store the data in an environment where a personal computer can not be used.

AD-1689 Tweezers for calibration weight

- This option is used when calibrating the balance using an external weight.

AD-8920 Remote display

- Connected to the FX-*i*WP series balance using the RS-232C serial interface to display the weight data away from the balance.

AD-8922 Remote controller

- Connected to the FX-*i* WP series balance using the RS-232C serial interface to display the weight data and to remotely control the balance.
- Analog output and comparator output available as an option to be installed.

AD-8121B Printer

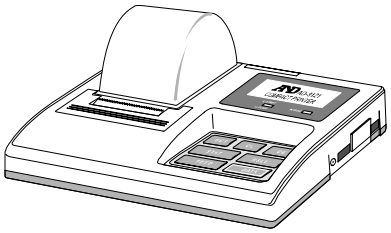

- Compact dot-matrix printer
- Statistical function, clock and calendar function, interval print function, graphic print function, dump print mode
- 5 x 7 dots, 16 characters per line
- Print paper (AX-PP143, 45 (W) x 50 (L) mm , ø65 mm)
- AC adapter or alkaline battery.

Note

When connecting the remote display, remote controller, or printer to the FX-*i* WP series balance using the cable provided with each device, the balance does not comply with IP65.

19. SPECIFICATIONS

		FZ-120*i*WP	FZ-200*i*WP	FZ-300*i*WP	FZ-1200*i*WP	FZ-2000*i*WP	FZ-3000*i*WP
Weighing capacity		122 g	220 g	320 g	1220 g	2200 g	3200 g
Maximum display		122.084 g	220.084 g	320.084 g	1220.84 g	2200.84 g	3200.84 g
Minimum weighing value (1 digit)		0.001 g			0.01 g		
Repeatability (Standard deviation)		0.001 g			0.01 g		
Linearity		±0.002 g			±0.02 g		
Stabilization time (typical at FAST)		Approx. 1 second					
Sensitivity drift (10°C to 30°C / 50°F to 86°F)		±2 ppm/°C					
Accuracy right after calibration using the internal mass. See notes below ∗		±0.010 g			±0.10 g		±0.15 g
		The value above is to the weighing capacity.					
Clock function		Buit-in clock					
Operating environment		5°C to 40°C (41°F to 104°F), 85%RH or less (No condensation)					
Display refresh rate		5 times/second, 10 times/second or 20 times/second					
Counting mode	Minimum unit mass	0.001 g			0.01 g		
	Number of samples	5, 10, 25, 50 or 100 pieces					
Percent mode	Minimum 100% reference mass	0.100 g			1.00 g		
	Minimum 100% display	0.01%, 0.1%, 1% (Depends on the reference mass stored.)					
External calibration weight		100 g 50 g	200 g 100 g	300 g 200 g 100 g	1000 g 500 g	2000 g 1000 g	3000 g 2000 g 1000 g
Weighing pan diameter		130 mm			150 mm		
Net weight		Approx. 3.2 kg					
External dimensions		193 (W) x 262.5 (D) x 84.5 (H) mm					
AC adapter		Confirm that the adapter type is correct for the local voltage and power receptacle type					
Power consumption		Approx. 11VA (supplied to the AC adapter)					
Interface		RS-232C					
Dust and water protection		Complying with IP65					

∗ **Accuracy right after calibration using the accessory small breeze break and the internal mass, in good ambient conditions (within the temperature range of 10°C to 30°C (50°F to 86°F) with no abrupt changes in temperature or humidity, no drafts, no vibration and no effect by magnetic fields or static electricity).**

With the FZ-*i*WP series balance, the environment and passing age may cause internal mass value error. Calibrate using an external mass and perform maintenance.

		FX-120*i*WP	FX-200*i*WP	FX-300*i*WP	FX-1200*i*WP	FX-2000*i*WP	FX-3000*i*WP
Weighing capacity		122 g	220 g	320 g	1220 g	2200 g	3200 g
Maximum display		122.084 g	220.084 g	320.084 g	1220.84 g	2200.84 g	3200.84 g
Minimum weighing value (1 digit)		0.001 g			0.01 g		
Repeatability (Standard deviation)		0.001 g			0.01 g		
Linearity		±0.002 g			±0.02 g		
Stabilization time (typical at FAST)		Approx. 1 second					
Sensitivity drift (10°C to 30°C / 50°F to 86°F)		±2 ppm/°C					
Operating environment		5°C to 40°C (41°F to 104°F), 85%RH or less (No condensation)					
Display refresh rate		5 times/second, 10 times/second or 20 times/second					
Counting mode	Minimum unit mass	0.001 g			0.01 g		
	Number of samples	5, 10, 25, 50 or 100 pieces					
Percent mode	Minimum 100% reference mass	0.100 g			1.00 g		
	Minimum 100% display	0.01%, 0.1%, 1% (Depends on the reference mass stored.)					
External calibration weight		100 g 50 g	200 g 100 g	300 g 200 g 100 g	1000 g 500 g	2000 g 1000 g	3000 g 2000 g 1000 g
Weighing pan diameter		130 mm			150 mm		
Net weight		Approx. 2.7 kg					
External dimensions		193 (W) x 262.5 (D) x 84.5 (H) mm					
AC adapter		Confirm that the adapter type is correct for the local voltage and power receptacle type					
Power consumption		Approx. 11VA (supplied to the AC adapter)					
Interface		RS-232C					
Dust and water protection		Complying with IP65					

20. EXTERNAL DIMENSIONS

FZ-120*i*WP / FZ-200*i*WP / FZ-300*i*WP
FX-120*i*WP / FX-200*i*WP / FX-300*i*WP

∗1: Width of the opening when a clear plate is removed
∗2: Inside dimension
∗3: Weighing pan diameter
∗4: Height from the weighing pan up to the cap of the breeze break (Inside dimension)
∗5: Height of the opening when a clear plate is removed
∗6: Underhook position

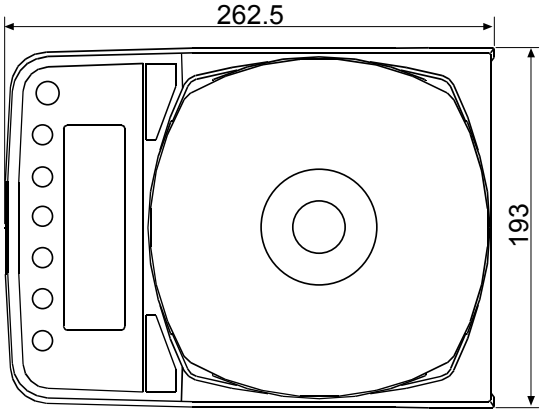

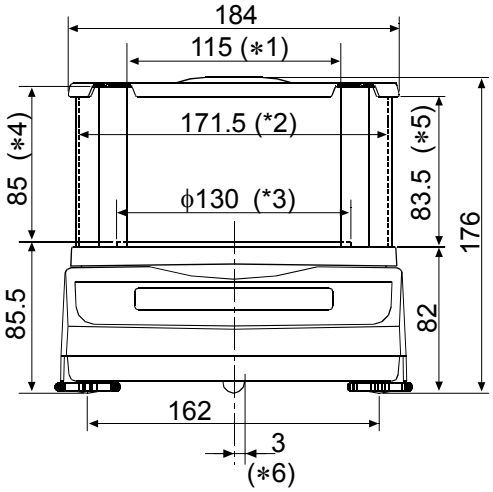

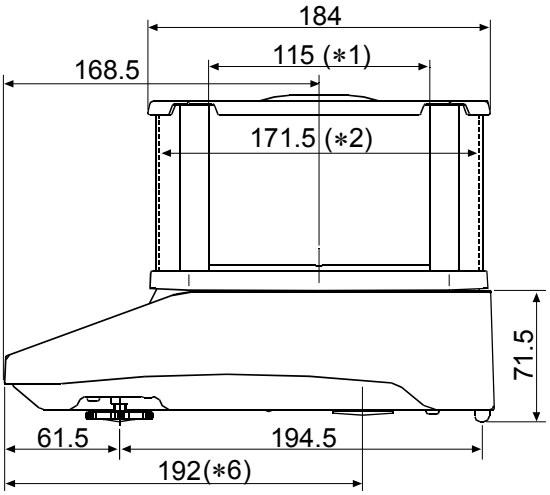

FZ-1200*i*WP / FZ-2000*i*WP / FZ-3000*i*WP
FX-1200*i*WP / FX-2000*i*WP / FX-3000*i*WP

∗6: Underhook position

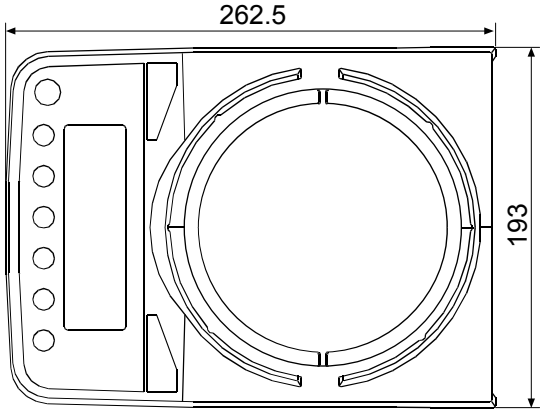

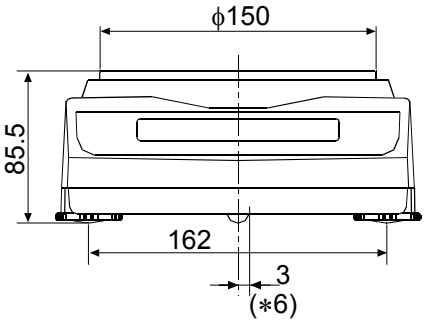

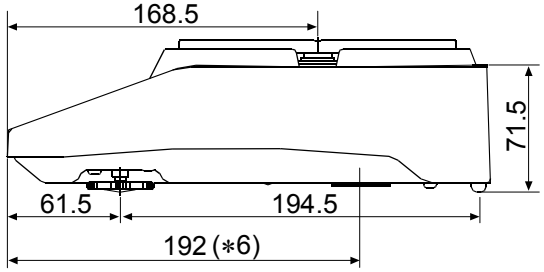

Unit: mm

FX*i*-WP-11 Large breeze break

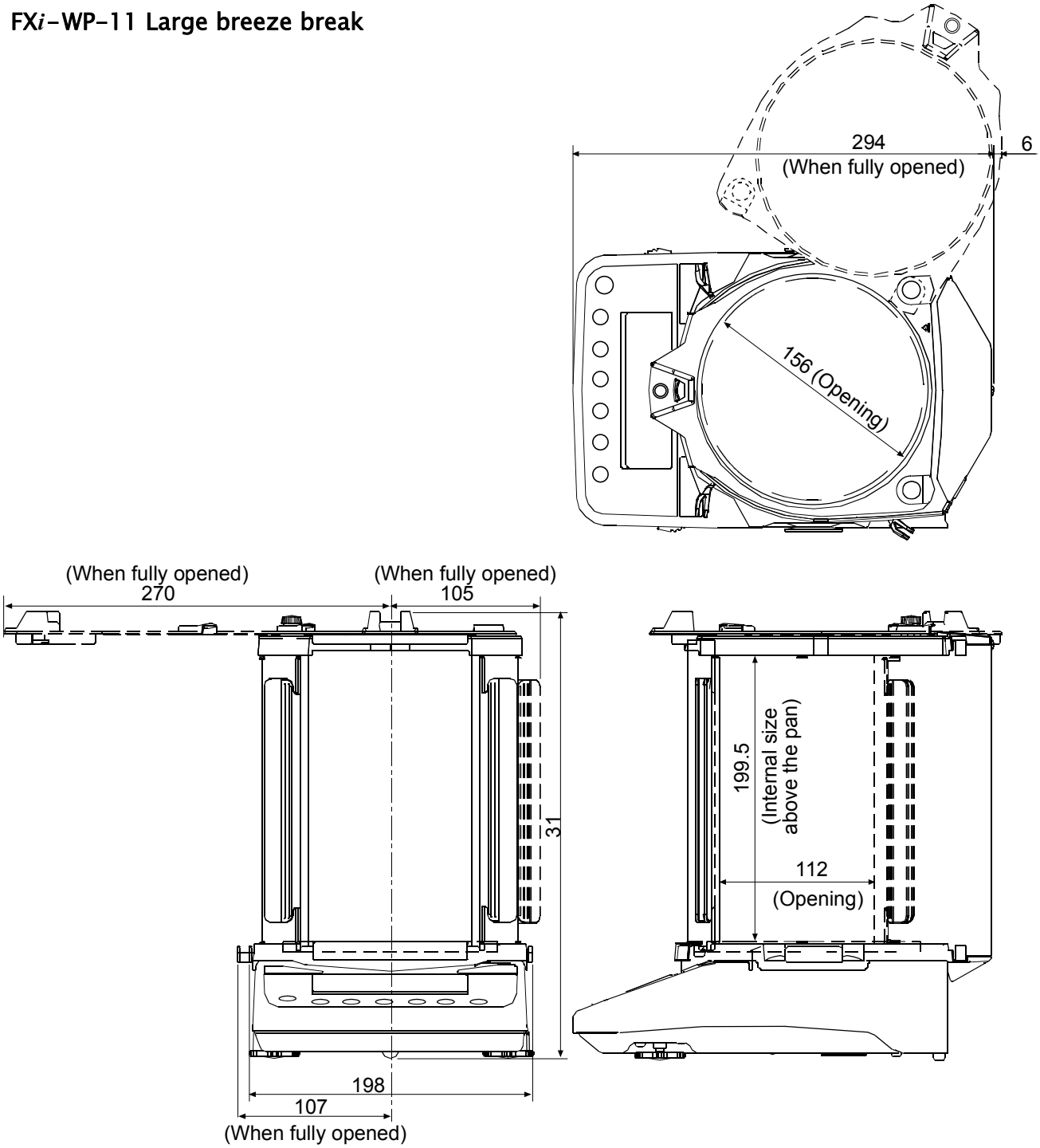

Unit: mm

21. TERMS / INDEX

Terms

Stable value The weight data when the stabilization indicator appears.

Environment Ambient conditions such as vibration, drafts, temperature, static electricity and magnetic fields which affect the weighing operation.

Calibration Adjustment of the balance so that it can weigh accurately.

Output To output the weight data using the RS-232C serial interface.

Zero point A weighing reference point or the zero display. Usually refers to the value displayed when nothing is on the weighing pan.

Digit Unit of digital resolution. Used for the balance, a unit of minimum weighing value.

Tare To cancel the weight of a container which is not included in the weight data.

Mode Balance operational function.

Re-zero To set the display to zero.

GLP Good Laboratory Practice.

GMP Good Manufacturing Practice.

Repeatability Variation in measured values obtained when the same weight is placed and removed repetitively. Usually expressed as a standard deviation.
e.g. Standard deviation=1 digit: This means that measured values fall within ±1 digit in the frequency of about 68%.

Stabilization time Time required after a sample being placed, until the stabilization indicator illuminates and the weight data is displayed.

Sensitivity drift An affect that a change in temperature causes to the weight data. Expressed as temperature coefficient.
e.g. Temperature coefficient = 2 ppm/°C : If a load is 300 g and the temperature changes by 10°C, the value displayed changes by the following value.
0.0002%/°C x 10°C x 300 g = 6 mg

IP65 IP code: Degree of protection provided by enclosures.
6: Dust-tight. No ingress of dust. 5: Protect against water jets.

Index

Keys and symbols

ON:OFF key 12, 37
SAMPLE key 12, 15
MODE key 12, 13, 15
CAL key 12, 34
PRINT key 12, 15
RE-ZERO key 11, 12, 16
Stabilization indicator 12
Interval output mode active indicator 12
Interval output mode standby indicator . 12
Processing indicator 12
CR 47
LF 47
Space 47
100% reference mass 19

A

A&D standard format 41, 45
AC adapter 7
AC adapter ID label 7
ACAI 18
AD-1683 ..... 10, 71
AD-1684 71
AD-1687 71
AD-1688 71
AD-1689 71
AD-8121B 55, 59, 72
AD-8920 ..... 70, 71
AD-8922 ..... 70, 72
AK 63
Animal mode indicator 12
AP Fnc Application 20, 41
AP-b Auto print difference 40
APF Application function 20, 41
AP-P Auto print polarity 40, 59
Application 20, 41
Application function 20, 41
Ar-d Zero after output 40
At-F Auto feed 40
Auto display-OFF 39, 43
Auto display-ON 39, 43
Auto print difference 40
Auto print mode A 40, 44
Auto print mode B 40, 44
Auto print polarity 40
AVE Average 23
Average 20, 23, 41
AX-KO2737-500 ..... 3, 9, 60, 65, 70
AX-USB-9P 70

B

bASFnc Environment display 15, 39
Baud rate 41, 58, 59
bEEP Beep 39
bEP- HI buzzer 39
bEP_ LO buzzer 39
bEP- OK buzzer 39
bPS Baud rate 41, 59
Breeze break 7, 70
btPr Data bit, parity bit 41, 59
Bubble spirit level 9, 10
Built-in battery unit 69

C

CAL E Calibration weight error 67
-CAL E Calibration weight error 67
CAL key 12, 34
Calibration 3, 12, 28, 31, 32, 33, 37, 52, 67, 77
Calibration report 33, 52
Calibration test 34, 52
Calibration test report 35, 52
CAnCEL Cancel 23
Capacity indicator 12, 41, 48
CL Adj Clock 39
CLEAr Clear the satistical data 23
Coefficient of variation 20, 23, 41
Command list 62
Comparator function 49
Comparator indicators 12
Cond Condition 39, 42
Counting mode 17
CP Comparator mode 39
CP Fnc Comparator 39, 41
CP Hi Upper limit 39
CP Lo Lower limit 39
CrLF Terminator 41, 59
CSV format 41, 46
CV Coefficient of variation 23

D

Data bits 58
Data format 41
Data logger 71
Data output mode 40
Data output pause 40
DC static eliminator 71

DCE....58, 60
Decimal point....39, 43
Digit....39, 43, 77
Display at start....39
Display refresh rate....39, 43
dout Data output....40
DP format....41, 45
DTE....58
Dust and waterproof balance....7, 9

E

-E....67
EC, E00....68
EC, E01....68
EC, E02....68
EC, E03....68
EC, E04....68
EC, E06....68
EC, E07....68
EC, E11....67
EC, E20....67
EC, E21....67
Electrostatic field meter....71
End block....55
ErCd Error code....41
Error 1....67
Error2....67
Ethernet interface....69
External dimensions....73, 74, 75, 76

F

FAST....27
Function table....38
FX*i*-02....69
FX*i*-08....69
FX*i*-09....69
FX*i*-10....70
FX*i*-11....70, 76

G

GLP....52
GLP output....28, 33, 34, 40, 52
GMP....52
Grounding terminal....7

H

HoLd Hold function....39, 42
Hold function....39, 42

I

ID number....52
ID number output....40
inFo....40
Inhibit....36
Initializing the Balance....37
int Interval time....40
Interval output mode....40, 45
Interval output mode active indicator....12
Interval output mode standby indicator....12
Interval time....40
IP65....3, 9, 56, 69, 73, 74, 77

K

Key mode....40, 44
Key mode B....40, 44
Key mode C....40, 44
KF format....41, 46

L

Leveling foot....7, 9, 10
Linearity....73, 74
Lo....67
Lower limit value....49

M

Main unit cover....7
MAX Maximum....23
MAX % Relative error of maximum value....23
Maximum....20, 23, 41
Maximum display....73, 74
MID....27
MIN Manimum....23
MIN % Relative error of minimum value....23
Minimum....20, 23, 41
Minimum 100% reference mass....73, 74
Minimum unit mass....73, 74
Minimum weighing value....73, 74
MODE key....12, 13, 15
MT format....41, 46

N

NET indicator....12
NU format....41, 46
Number of data....20, 41

O

ON:OFF key....12, 37
Operating environment....73, 74

P

Pan boss 7, 10
Pan support 7
Parity 58
PCS 17
Percent Mode 19
Permit 36
Pnt Decimal point 39, 43
PoFF Auto display-OFF 39, 43
P-on Auto display-ON 39, 43
PRINT key 12, 15
Printer 59, 72
Processing indicator 12
Programmable unit 57
Prt Data output mode 40, 59
PUSE Data output pause 40, 59

R

R Range 23
Range 20, 23, 41
Relative error of maximum value 23
Relative error of minimum value 23
Remote controller 72
Remote display 71
Repeatability 73, 74
Response indicators 12, 27
RE-ZERO key 11, 12, 16
rnG Display at start 39
RS-232C 58, 60
RsCom 61
RsKey 61

S

SAMPLE key 12, 15
SD Standard deviation 23
Sensitivity drift 73, 74
S-id ID number output 40
SiF Serial interface 41
SLOW 27
SPd Display refresh rate 39, 43
Stability band width 42
Stabilization indicator 12, 15
Stabilization time 73, 74
Standard deviation 20, 23, 41
Standby indicator 12
StAF Statistical function mode output items . 21, 41
Statistical calculation mode 3, 20, 21, 22, 41, 48
Statistical function mode output items 41
St-b Stability band width 39, 42
S-td Time/Date output 40
Stop bit 58
Stream mode 40, 44
SUM Sum 23
Sum 20, 23, 41

T

Tare 16, 17, 19, 26
Terminal cover 7, 9, 65
Terminator 41
Time/Date output 40
Timeout 41
Title block 55
Transmission form 58
Transmission rate 58
Transmission system 58
trc Zero tracking 39
t-UP Timeout 41
Tweezers for calibration weight 71
tYPE Data format 41, 59

U

Underhook 56
Units 12, 13, 15
Upper limit value 49
USB interface 69

W

Waterproof diaphragm 7, 10, 65, 67
Waterproof RS-232C cable 3, 7, 9, 60, 65, 70
Weighing 16
Weighing capacity 73
Weighing capacity 11, 48, 67, 73, 74
Weighing environment logger 71
Weighing pan 7
Weighing pan diameter 73, 74
Weighing units 13
WinCT 61

Z

Zero tracking 43